euromex
microscopes holland

CATALOG
2023 • 2024
PART 2

MICROSCOPES FOR EDUCATION, LIFE SCIENCE AND INDUSTRY

PART 1 MICROSCOPES FOR EDUCATION
PART 2 MICROSCOPES FOR LIFE SCIENCE
PART 3 MICROSCOPES FOR INDUSTRY

contents

euromex
MICROSCOPE COLLECTION
2023 • 2024

PART 1
EDUCATION biological microscopes 1
EDUCATION stereo microscopes 2
EDUCATION digital solutions 3

PART 2
LIFE SCIENCE biological microscopes 4
LIFE SCIENCE fluorescence microscopes 5
LIFE SCIENCE stereo microscopes 6
LIFE SCIENCE digital solutions 7

PART 3
INDUSTRY stereo microscopes 8
INDUSTRY materials science microscopes 9
INDUSTRY digital solutions 10

OTHER
ACCESSORIES for microscopy 11
OTHER OPTICAL PRODUCTS magnifiers | instruments 12

1 EDUCATION | BIOLOGICAL MICROSCOPES
MicroBlue • EcoBlue • BioBlue
BioBlue.Lab • bScope • iScope

2 EDUCATION | STEREO MICROSCOPES
EduBlue • StereoBlue
NexiusZoom • AP series

3 EDUCATION | DIGITAL SOLUTIONS
Digital microscopes • MacroZoom • USB cameras • HD cameras • WiFi cameras
Cooled cameras • Tablet cameras • Software • Adapters

4 LIFE SCIENCE | BIOLOGICAL MICROSCOPES
iScope • bScope • Delphi-X Observer • Oxion
BioBlue.Lab • Oxion Inverso • Delphi-X Inverso

5 LIFE SCIENCE | FLUORESCENCE MICROSCOPES
iScope • bScope • Delphi-X Observer • Oxion • Oxion Inverso
Delphi-X Inverso • LED light sources (fluorescence) • Fluorescence filter sets

6 LIFE SCIENCE | STEREO MICROSCOPES
NexiusZoom (EVO) • StereoBlue • DZ series
Z series • P series

7 LIFE SCIENCE | DIGITAL SOLUTIONS
Digital microscope • MacroZoom • WiFi camera • USB cameras
HD cameras • Cooled cameras • Tablet camera • Software • Adapters

8 INDUSTRY | STEREO MICROSCOPES
NexiusZoom, -EVO and -ESD • NexiusZoom for Gemology
StereoBlue • DZ series • Z series • BE-50 series • P series

9 INDUSTRY | MATERIALS SCIENCE MICROSCOPES
iScope (materials & polarization) • bScope
Delphi-X Observer • Oxion • Oxion Inverso

10 INDUSTRY | DIGITAL SOLUTIONS
Digital microscopes • MacroZoom • WiFi camera • USB cameras
HD cameras • Cooled cameras • Tablet cameras • Software • Adapters

11 ACCESSORIES | FOR MICROSCOPY
Illumination solutions • Preparation accessories • Dissection kits
Microscope prepared slides • Disposables • Stains

12 OTHER OPTICAL PRODUCTS
Magnifiers & measuring microscopes • Refractometers
Polarimeters • Spectroscopes • Pathology Scanner

about euromex

Euromex Microscopen bv is a leading manufacturer of microscopes and other optical instruments. Founded in 1966, Euromex has become a world-class supplier of biological, stereo and metallurgical microscopes

The corporate office is based in Arnhem, The Netherlands. A facility with a 2,000 m² conditioned logistics warehouse, an opto-mechanical workshop, an R&D department and a high-level quality control department

Around the world, Euromex operates in more than 120 countries through distributors, resellers and agents. A wide variety of customers such as schools and educational institutes, clinical and research laboratories and a broad range of industrial customers are using Euromex microscopes

Euromex Microscopen bv is a subsidiary of **Euromex Optics Group bv**, a group holding company with active subsidiaries in the field of optical instruments and high level optical and opto-mechanical components. Euromex Optics Group BV is a **GSI Group Company**

The broad product offering of Euromex can be found in this grand catalog and online at **www.euromex.com**

Physix Photonics bv is also a subsidiary of the Euromex Optics Group. Physix manufactures optical components and optical assemblies for OEM customers. The offering varies from plan optics, curved optics, specials optics to optical coatings. Detailed information about Physix Photonics can be found on **www.physix.com**

Visit **Euromex Academy** for Video Tutorials and Manuals

View the Product Videos on YouTube

choose the right microscope

microscope selector

We have made a guide to help you find the right microscope for your specific application. A list of recommended models for most common applications in education, life science and industry can simplify your selection

SEE PAGE 412

At the end of the catalog you'll also find an index page, listing the products featuring in this catalog alphabetically

SEE PAGE 420

biological microscopes

Euromex offers a wide range of life science microscopes
that are used by researchers and biologists worldwide

On the next pages you will find details about our different models and we will get you introduced to
technologies in microscopy such as the iCare sensor, CSS system and LED technology,
which brings Euromex users to the next level of microscopy

life science

biological microscopes

product information

ISCOPE • PAGE 106
BSCOPE • PAGE 118
DELPHI-X OBSERVER • PAGE 126
OXION • PAGE 138
BIOBLUE.LAB • PAGE 144
DELPHI-X INVERSO • PAGE 148
OXION INVERSO • PAGE 154

iScope®

The iScope® is available in various configurations suitable for life and biomedical sciences, high schools, universities but also for routine medical applications

Besides the brightfield contrast method, configurations for phase contrast, cardioid mirror darkfield, basic polarization and several epi-illumination sources for fluorescence applications can be used. iScope® models with multiheads are also available for teaching purposes

product information

IS.1153-PLi

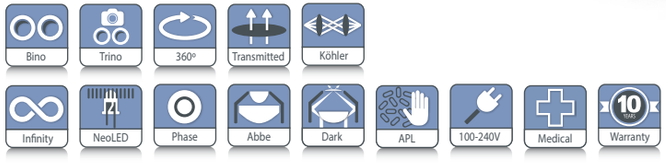

IS.1153-PLi
480 (h) x 210 (w) x 255 (d) mm | 9.0 kg

iScope® tilting head

HIGHLIGHTS

- **EWF 10x/22 mm and EWF 10x/20 mm eyepieces**
- **Binocular and trinocular models**
- **Smart Light Control (SLC) system available**
- **Multihead and face-to-face dual head systems**
- **Optional tilting head**
- **Quintuple reversed nosepiece**
- **E-plan, plan and plan phase objectives**
- **E-plan, plan and plan phase IOS objectives**
- **156 x 138 mm stage**
- **187/230 x 140 mm rackless stage**
- **Cardioid mirror darkfield condenser with 5 W NeoLED™ illumination**
- **3 W NeoLED™ Köhler illumination**
- **iCare sensor for energy saving**
- **CSS - Cable Storage System**
- **10 Years warranty**

SPECIFICATIONS

EYEPIECES

- Extended plan wide field EWF 10x/20 mm eyepieces with 20 mm field of view and adjustable diopter on the left eyepiece for non-infinity corrected systems (Ø 23.2 mm tube. Tube length 160 mm)
- Extended plan wide field EWF 10x/22 mm eyepieces with 22 mm field of view and adjustable diopter on both eyepieces for infinity corrected IOS plan and plan phase systems and adjustable diopter on the left tube for EPLi systems (Ø 30 mm tube. Tube length 200 mm)

HEAD

Binocular and trinocular Siedentopf type heads with 30° inclined tubes. Interpupillary distance from 48 to 76 mm. The trinocular head of the plan infinity corrected models (IS.1153-PLi) has an optical path selector (100:0 / 50:50) and ± 5 diopter adjustments on both Ø 30 mm tubes. The trinocular head of the E-plan infinity corrected models (IS.1153-EPLi) has a fixed built-in beam splitter (50:50) and ± 5 diopter adjustment on the Ø 30 mm left tube.
The trinocular head of the E-plan finite models (IS.1153-EPL) has a fixed built-in 50:50 beam splitter and one ± 5 diopter adjustment on the Ø 23.2 mm left tube. A unique rotating system allows the ergonomic positioning of both tubes in a high (431 mm) and in a low position (397 mm). The trinocular head comes with a Ø 23.2 mm photo port

ERGONOMIC TILTING HEAD

Optional ergonomic 5° to 35° tilting head supplied with EWF 10x/22 mm eyepieces, interpupillary distance 48-75 mm and optional photo attachment with standard Ø 23.2 mm tube (only infinity corrected models)
To order an iScope® with tilting head use reference IS.1158-xxx
To order an iScope® with tilting head and photo tube attachment use reference IS.1159-xxx

FACE-TO-FACE HEADS

The iScope® can be supplied with two heads in a face-to-face configuration, allowing simultaneous observation by two operators. The Ø 30 mm tubes of the head are equipped with EWF 10x/20 mm eyepieces. Both heads have two diopter adjustments. Only available for the model with plan infinity corrected objectives (IS.1154-PLi/T). The face-to-face head is equipped with a 2-color laser pointer

MULTIHEAD SYSTEM

The iScope® can be extended with a unique multihead system for in total two, three or five heads, allowing simultaneous observation of specimens
The central attachment is equipped with a joystick to move a green and red laser pointer across the entire field of view of all heads. Configurations with one, two or four additional viewing binocular heads, 30° inclined tubes and plan 4x, 10x, S40x, S100x oil immersion infinity corrected IOS objectives. All heads are equipped with extended wide field plan EWF 10x/22 mm eyepieces
(references: IS.1156-PLi-x, x = total number of heads)

OBJECTIVES - 45 MM PARFOCAL

E-plan EPL	4x/0.10	10x/0.25	20x/0.40*	S40x/0.65		S100x/1.25 oil
E-plan EPLi IOS	4x/0.10	10x/0.25		S40x/0.65		S100x/1.25 oil
Plan PLi IOS	4x/0.10	10x/0.25	20x/0.40*	S40x/0.65	S60x/0.85*	S100x/1.25 oil
Plan phase PLPH		10x/0.25	20x/0.40	S40x/0.65		S100x/1.25 oil
Plan phase PLPHi IOS		10x/0.25	20x/0.40	S40x/0.65		S100x/1.25 oil

** optional*
All optics are anti-fungus treated and anti-reflection coated for maximum light throughput

NOSEPIECE

Revolving quintuple reversed nosepiece for max. 5 objectives

STAGE

The iScope® can be equipped with three types of stages:

- 156 x 138 mm stage equipped with integrated 79 x 52 mm X-Y mechanical stage
- 187/230 x 140 mm rackless stage equipped with double slide holder and integrated 79 x 52 mm X-Y mechanical stage. The iScope® rackless stage has no protruding parts, enables more smooth movements and is safer
- 220 x 157 mm ceramic stage with integrated 75 x 50 mm X-Y mechanical stage. The ceramic coating protects the stage effectively against marks and scratches. The surface also ensures stray light not to be reflected from the stage into the objective

The iScope® can be supplied with a heating stage which can be set up to 50° Celsius by a PID temperature controller. Only available with newly purchased microscopes. Higher temperatures can be achieved on special request

CONDENSER FOR BRIGHTFIELD

The standard height adjustable Abbe N.A. 1.25 condenser for brightfield accepts sliders with phase annuli suitable for plan phase 10x/20x or S40x/S100x oil immersion IOS objectives for economical phase contrast. With magnification indication. A slider with a simple dark stop for darkfield up to 400x magnification is also available

CONDENSER FOR ZERNIKE PHASE CONTRAST

An optional height adjustable Zernike NA. 1.25 phase contrast disc condenser with plan phase 10/20/S40x and S100x oil immersion objectives and darkfield stop position for darkfield contrast up to 400x magnification. Supplied with alignment telescope and green filter

CONDENSER FOR DARKFIELD

A state-of-the-art condenser equipped with reflective cardioid mirrors, a high powered 5 W LED and a S100x objective with built-in iris diaphragm enable a real 1000x magnification darkfield solution. By using IS.9150 and IS.7200-I an existing brightfield microscope can be upgraded to darkfield

FOCUSING

Coaxial coarse and fine adjustments, 200 graduations, 1 µm per graduation, 200 µm per rotation, total travel range is approximately 24 mm. Supplied with an adjustable rack stop to prevent damage to sample and objectives. The coarse adjustments are equipped with friction control

ILLUMINATION

3 W adjustable Köhler NeoLED™ diascopic illumination with internal 100-240 V power supply. The innovative NeoLED™ design offers larger apertures, allowing the optical system of the iScope® microscope to produce images at higher resolutions, very close to the theoretical diffraction limit of the optics. Other benefits of the NeoLED™ is the low energy consumption, no heating and a long operating life span. The Köhler illumination on models with IOS plan and plan phase infinity corrected system provides high contrast and a maximum achievable resolving power of the optics. Also available for other models as option

SMART LIGHT CONTROL SYSTEM

- The Smart Light Control (SLC) automatically memorises the last used illumination intensity brightness for each individual objective. Simply rotate the nosepiece to the next objective and the SLC will instantly adjust the illumination intensity to your desired level
- Light intensity can be locked to stop intensity changing by simply pressing the control button twice
- The LCD screen at the front of the microscope informs the user of the magnification and light intensity settings of the microscope, as well as the sleep and locking modes when activated
- Push the button once to enter/leave sleep mode and push the button twice to enter/leave lock mode

ICARE SENSOR

The unique iCare Sensor is developed to avoid unnecessary loss of energy. The illumination of the microscope automatically switches off shortly after microscopists step away from their position

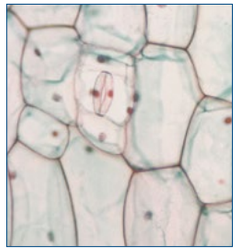

Normal LED

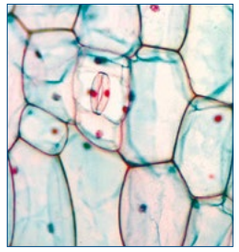

NeoLED™

CSS – CABLE STORAGE SYSTEM

iScope® allows users to easily insert the power cable into the back of the instrument, which enables easy storage. The integrated carrying grip at the back of the microscope ensures safe transportation of the microscope

PACKAGE CONTENT

Supplied with power cord, dust cover, a spare fuse, user manual and 5 ml immersion oil for models with S100x objective. Phase contrast models are supplied with green filter and alignment telescope. All packed in polystyrene boxes

iCare sensor

ISCOPE® FOR LIFE SCIENCE (NON-INFINITY MODELS)

MODELS	Bino	Trino	Phase contrast	EWF 10x20 mm	E-plan 4x/10x/ 40x/100x objectives	Plan phase 10x/20x/ 40x/100x objectives	Mechanical stage
IS.1152-EPL	•			•	•		•
IS.1153-EPL		•		•	•		•
IS.1152-PLPH	•		•	•		•	•
IS.1153-PLPH		•	•	•		•	•

ISCOPE® FOR LIFE SCIENCE (INFINITY MODELS)

MODELS	Bino	Trino	Phase contrast	EWF 10x22 mm	E-plan IOS 4x/10x/ 40x/100x objectives	Plan IOS 4x/10x/ 40x/100x objectives	Plan phase IOS 10x/20x/ 40x/100x objectives	Mechanical rackless stage	Smart Light Control	Köhler LED
IS.1152-EPLi	•			•	•			•		
IS.1152-EPLi/SLC	•			•	•			•	•	
IS.1153-EPLi		•		•	•			•		
IS.1153-EPLi/SLC		•		•	•			•	•	
IS.1152-PLi	•			•*		•		•		•
IS.1152-PLi/SLC	•			•*		•		•	•	•
IS.1153-PLi		•		•*		•		•		•
IS.1153-PLi/SLC		•		•*		•		•	•	•
IS.1152-PLPHi	•		•	•*			•	•	•	•
IS.1153-PLPHi		•	•	•*			•	•	•	•

** Two tubes with diopter adjustments*
Some models are also available as in vitro diagnostic medical devices class A - (EU) 2017/746. Contact your Euromex dealer

ISCOPE® FOR LIFE SCIENCE (FACE-TO-FACE DUAL HEAD SYSTEM)

MODELS	Total users	Binocular EWF 10x/20 mm	Trinocular EWF 10x/20 mm	Plan IOS 4x/10x/ 40x/100x objectives	Mechanical rackless stage	iCare sensor	Köhler LED
IS.1154-PLi/T	2	1x	1x	•	•	•	•

Also available as in vitro diagnostic medical devices class A - (EU) 2017/746. Contact your Euromex dealer

ISCOPE® FOR LIFE SCIENCE (INFINITY - MULTIHEAD SYSTEMS)

MODELS	Total users	Binocular	Trinocular	EWF 10x22 mm	Plan IOS 4x/10x/ 40x/100x objectives	Mechanical rackless stage	Köhler LED
IS.1156-PLi2	2	1x	•	•	•	•	•
IS.1156-PLi3	3	2x	•	•	•	•	•
IS.1156-PLi5	5	4x	•	•	•	•	•
IS.1156-PLi7	7	6x	•	•	•	•	•
IS.1156-PLi9	9	8	•	•	•	•	•

Some models are also available as in vitro diagnostic medical devices class A - (EU) 2017/746. Contact your Euromex dealer

ISCOPE® FOR LIFE SCIENCE (INFINITY - ERGONOMIC TILTING HEAD)

MODELS	Bino	Photo port	Phase contrast	EWF 10x22 mm	E-plan IOS 4x/10x/ 40x/100x objective	Plan IOS 4x/10x/ 40x/100x objectives	Plan phase IOS 10x/20x/ 40x/100x objectives	Mechanical rackless stage	Köhler LED
IS.1158-EPLi	•			•	•			•	
IS.1159-EPLi	•	•		•	•			•	
IS.1158-PLi	•			•		•		•	•
IS.1159-PLi	•	•		•		•		•	•
IS.1158-PLPHi	•		•	•			•	•	•
IS.1159-PLPHi	•	•	•	•			•	•	•

Some models are also available as in vitro diagnostic medical devices class A - (EU) 2017/746. Contact your Euromex dealer

ISCOPE® FOR LIFE SCIENCE (DARKFIELD CONTRAST APPLICATION)

MODELS	Trino	Darkfield	EWF 10x20 mm	EWF 10x22 mm	E-plan 4x/10x/ 40x/100x objectives	Plan IOS 4x/10x/ 40x/100x objectives	Mechanical rackless stage	Köhler LED
IS.1153-PLi/DFi	•	•		•		•	•	•
IS.1153-EPL/DF	•	•	•		•			

Models for darkfield observation IS.1152-PLi/DF is supplied with a state-of-the-art condenser equipped with reflective cardioid mirrors and a high powered 5 W LED. Together with a S100x objective with built-in iris diaphragm real 1000x magnification darkfield solution can be achieved. All other specifications are identical to models IS.1152-PLi and IS.1153-PLi

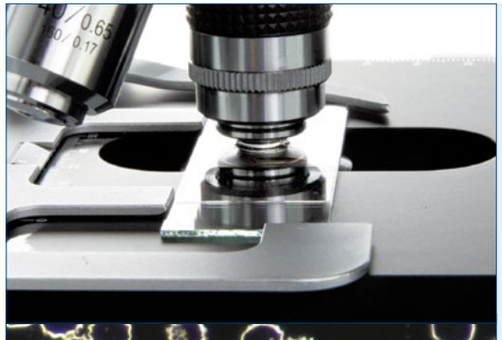

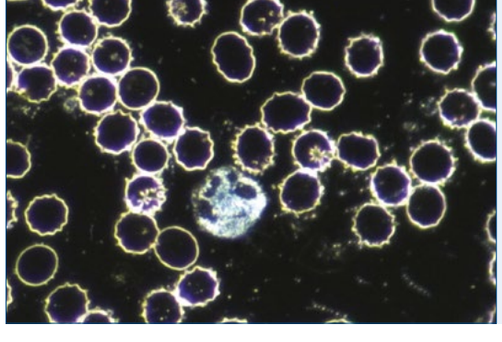

DARKFIELD

Darkfield contrast is used in particular for unstained samples. The produced image has the appearance of a dark, almost black background with highlighted bright objects on it, producing very recognizable, often even called spectacular images. These objects, because they are unstained, are hard to see with brightfield contrast. The applications are mostly biological samples, smears from tissue culture or water-borne, single-celled organisms

In the past darkfield microscopy was limited due to low light levels. Euromex has overcome this issue by developing very strong illumination methods, without causing damage to the samples. A 5 W build in high power LED is used to power the especially designed cardioid-shaped lens condenser system. Combined with a special 100x objective with built-in iris diaphragm for extra contrast this system is unique in its class

ACCESSORIES AND SPARE PARTS

EYEPIECES (23.2 MM)

IS.6010 EWF 10x/20 mm eyepiece
IS.6010-P EWF 10x/20 mm eyepiece with pointer
IS.6010-C EWF 10x/20 mm eyepiece with crosshairs
IS.6010-CM EWF 10x/20 mm eyepiece with 10/100 micrometer and cross
IS.6015 WF 15x/16 mm eyepiece
IS.6099 Pair of eyecups

EYEPIECES (30 MM)

IS.6210 EWF 10x/22 mm eyepiece
IS.6210-C EWF 10x/22 mm eyepiece with crosshairs
IS.6210-P EWF 10x/22 mm eyepiece with pointer
IS.6210-CM EWF 10x/22 mm eyepiece with 10/100 micrometer and crosshairs
IS.6212 WF 12.5x/17 mm eyepiece
IS.6215 WF 15x/16 mm eyepiece
IS.6220 WF 20x/12 mm eyepiece
IS.6310 EWF 10x/20 mm eyepiece
IS.6310-C EWF 10x/20 mm eyepiece with crosshairs
IS.6310-CM EWF 10x/20 mm eyepiece with 10/100 micrometer and crosshairs
IS.6299 Pair of eyecups infinity models (Ø 30 mm tube)

OBJECTIVES - 45 MM PARFOCAL

IS.7104 E-plan EPL 4x/0.10 objective. WD 15.2 mm
IS.7110 E-plan EPL 10x/0.25 objective. WD 5.5 mm
IS.7120 E-plan EPL 20x/0.40 objective. WD 3.5 mm
IS.7140 E-plan EPL S40x/0.65 objective. WD 0.45 mm
IS.7160 E-plan EPL S60x/0.85 objective. WD 0.19 mm
IS.7100 E-plan EPL S100x/1.25 oil objective. WD 0.13 mm

IS.7710 Plan PLPH 10x/0.25 phase contrast objective. WD 12.2 mm
IS.7720 Plan PLPH 20x/0.40 phase contrast objective. WD 5 mm
IS.7740 Plan PLPH S40x/0.65 phase contrast objective. WD 0.37 mm
IS.7700 Plan PLPH S100x/1.25 oil phase contrast objective. WD 0.13 mm

IS.8804 E-plan EPLi 4x/0.10 IOS infinity corrected objective. WD 15.4 mm
IS.8810 E-plan EPLi 10x/0.25 IOS infinity corrected objective. WD 5.8 mm
IS.8840 E-plan EPLi S40x/0.65 IOS infinity corrected objective. WD 0.43 mm
IS.8800 E-plan EPLi S100x/1.25 oil IOS infinity corrected objective . WD 0.13 mm

IS.7202 Plan PLi 2x/0.05 IOS infinity corrected objective, WD 18.3 mm. Best to be used together with swing-out condenser
IS.7204 Plan PLi 4x/0.10 IOS infinity corrected objective. WD 15.4 mm
IS.7210 Plan PLi 10x/0.25 IOS infinity corrected objective. WD 10 mm
IS.7220 Plan PLi 20x/0.40 IOS infinity corrected objective. WD 5.1 mm
IS.7240 Plan PLi S40x/0.65 IOS infinity corrected objective. WD 0.54 mm
IS.7260 Plan PLi S60x/0.85 IOS infinity corrected objective. WD 0.14 mm
IS.7200 Plan PLi S100x/1.25 IOS infinity corrected objective. WD 0.13 mm
IS.7200-I Plan Super Contrast PLi S100x/1.25 oil IOS infinity corrected objective with built-in iris diaphragm. WD 0.13 mm. Suitable for darkfield contrast
IS.7200-W Plan PLi S100x/1.10 IOS water immersion objective . Working distance 0.14 mm. Cover glass 0.17 mm corrected
IS.7404 Plan Fluarex PLFi 4x/0.13 IOS infinity corrected objective. 0.17 mm cover glass correction. WD 16.3 mm
IS.7410 Plan Fluarex PLFi 10x/0.30 IOS infinity corrected objective. 0.17 mm cover glass correction. WD 12.4 mm
IS.7420 Plan Fluarex PLFi 20x/0.50 IOS infinity corrected objective. 0.17 mm cover glass correction. WD 1.5 mm

IS.7440 Plan Fluarex PLFi S40x/0.75 IOS infinity corrected objective. 0.17 mm cover glass correction. WD 0.35 mm
IS.7400 Plan Fluarex PLFi S100x/1.30 oil IOS infinity corrected objective. 0.17 mm cover glass correction. WD 0.13 mm

IS.8910 Plan PLPHi 10x/0.25 phase contrast IOS infinity corrected objective. WD 10.2 mm
IS.8920 Plan PLPHi 20x/0.40 phase contrast IOS infinity corrected objective. WD 5.1 mm
IS.8940 Plan PLPHi S40x/0.65 phase contrast IOS infinity corrected objective. WD 0.5 mm
IS.8900 Plan PLPHi S100x/1.25 oil phase contrast IOS infinity corrected objective. WD 0.13 mm

WD = working distance

CONDENSERS

IS.9102 Standard Abbe condenser 1.25 NA with slot for darkfield and phase contrast sliders
IS.9105 Swing-out 0.9/1.25 N.A. condenser
IS.9150 Cardiod darkfield condenser with integrated 5 W LED light source and external 100-240 V mains adapter. To be used with IS.7200-I

PHASE CONTRAST ATTACHMENTS

IS.9124 Zernike phase contrast set including rotating disc with PLPH 10/20/40/100, brightfield and darkfield position
IS.9127 Zernike phase contrast set including rotating disc with PLPH 10/20/40/100, brightfield and darkfield position
IS.9148 Alignment telescope for phase contrast, Ø 30 mm tube
IS.9149 Alignment telescope for phase contrast, Ø 23.2mm tube
IS.9160 Phase contrast slider set with 10x and S40x PLPH objectives and annuli for 10/S40x PLPH objectives. Also suitable for optional 20x PLPH objective
IS.9161 Phase contrast slider set with 20x and S100x PLPH objectives and annuli for 20x/S100x PLPH objectives
IS.9162 Phase contrast slider set with 10x and S40x PLPHi IOS infinity corrected objectives and annuli for 10x/S40x PLPHi IOS infinity corrected objectives. Also suitable for optional 20x PLPHi infinity corrected objective
IS.9163 Phase contrast slider set with 20x and S100x PLPHi IOS infinity corrected objectives and annuli for 20x/S100x PLPHi IOS infinity corrected objectives

MISCELLANEOUS

IS.9170 Slider with darkfield stop, up to 400x
IS.9194 Slider with phase contrast annuli for S40x phase contrast objective
IS.9503 Large ceramic stage. Only with new microscopes, add /C suffix after iScope® model part number
IS.9880 Köhler attachment
IS.4300 Aluminum transport case for iScope®
AE.9919 Nylon carry bag for iScope (29 x 53 x 23)
AE.3684 Glass fuses 500 mA 250 V, 10 pieces
AE.5168-I Heating stage series with controller, only with new microscopes
SL.5500 NeoLED™ replacement unit

POLARIZATION ATTACHMENTS

IS.9600 Polarization filter 45 mm for lamphouse
IS.9601 Polarization set: simple rotating polarizer for lamphouse and fixed polarizer mounted under head
IS.9626 Polarization filter for mounting under the head

FILTERS

IS.9700 Blue filter 45 mm for lamphouse
IS.9702 Green filter 45 mm for lamphouse
IS.9704 Yellow filter 45 mm for lamphouse
IS.9706 White opaque filter 45 mm for lamphouse

CAMERA ACCESSORIES

IS.9800 single photo tube attachment with one 23.2 mm tube for ergonomic tilting head of iScope® infinity systems

AE.5130 Universal SLR adapter with built-in 2x lens for standard 23.2 mm tube. Needs T2 adapter

AE.5025 T2 adapter for Nikon D SLR digital camera

AE.5040 T2 adapter for Canon EOS SLR digital camera

DISPOSABLES

PB.5155 Microscope slides 76 x 26 mm, ground edges, 50 pieces per pack

PB.5157-W Microscope slides 76 x 26 mm, ground edges and frosted side white color, 50 pieces per pack

PB.5157-B Microscope slides 76 x 26 mm, ground edges and frosted side blue color, 50 pieces per pack

PB.5160 Microscope slides 76 x 26 mm with cavity, ground edges. 10 pieces per pack

PB.5165 Cover glasses 18 x 18 mm, 0.13-0.17 mm, 100 pieces

PB.5168 Cover glasses 22 x 22 mm, 0.13-0.17 mm, 100 pieces

PB.5245 Lens cleaning paper, 100 sheets per pack

PB.5255 Immersion oil, 25 ml. Refraction index n = 1.515

PB.5274 Isopropyl alcohol 99%, 200 ml

PB.5275 Cleaning kit: lens fluid, lint free lens tissue/paper, brush, air blower, cotton swabs

PB.5276 Microscope maintenance and servicing kit, 16pcs: cleaning brush, 6 pcs screwdriver set, air blower, 3 pcs Allen key, 1.5, 2, 2.5 mm, lens cleaning fluid 20 ml, cleaning cloth 140 x 140 mm, 100 pcs lens tissue sheets, tube of maintenance grease, 10 ml bottle of oil, packed in a nice toolbox

IS.1154-PLi /T

IS.1156-PLi-9

IS.1153-PLi/SLC

IS.1159-EPLi

IS.1158-PLi, with optional IS.9503 Ceramic stage

IS.1153-EPL-DF

DIMENSIONS

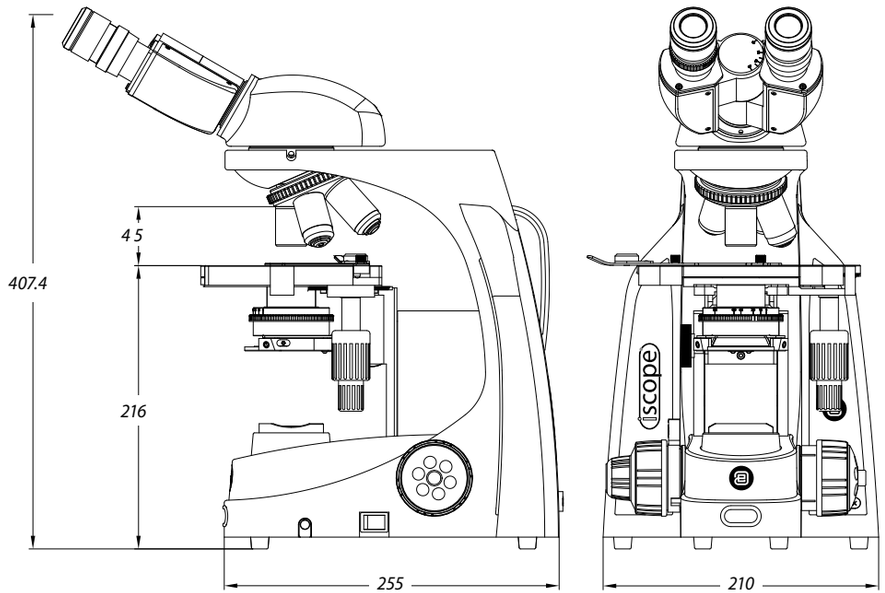

iScope cable storage system

how to keep the optics clean
PB.5275 cleaning kit

Dust and dirt particles have a negative affect on image quality. Keeping the optical system of your microscope clean is essential for the best image quality and overall lifetime of your microscope.
Dust and dirt on optical elements such as lenses, prisms and filters that are left unattended can be become difficult - or even impossible - to remove and may cause mold

1

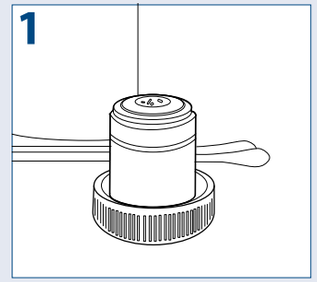

Place your objective or eyepiece on a secure location. One can use the objective's cap or eyepieces can be placed in the cut-outs within the storage box. Condensers and collector lenses can remain on the microscope

2

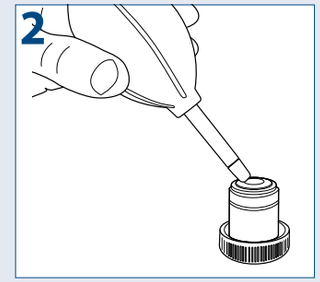

To prevent scratches on coatings and optical glass, first try to remove dirt and dust that sticks to the optical surface with an air-blower or pressurized dry air (oil-free and under moderate pressure version only)

3

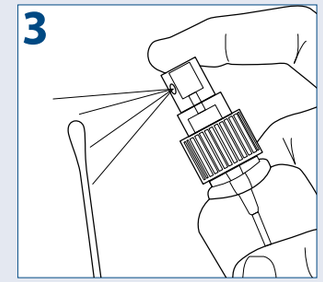

Use an absorbent lens paper or cotton swap. Damp a swap or towel with a small amount of lens cleaning fluid or cleaning mixture (Either pure iso-propanol or a mixture of 7 parts ether and 3 parts alcohol)

4

Clean the lens by using the tip of the cotton swap or lens paper*. When cleaning a large lens surface, wipe with little pressure from the center towards the periphery in a circular motion, do not use zig-zag motion. Discard each lens paper or cotton swap after a single use

5

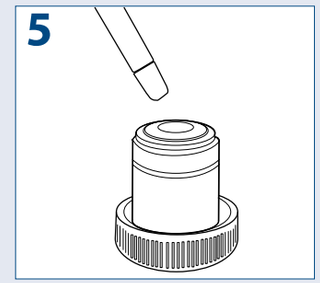

Wait until the cleaning fluid is evaporated, or speed up this process by using pressurized dry air

6

Check with the help of a magnifying glass if the surface is clean and place the cleaned item back on the nosepiece of the microscope

PB.5275

PLEASE NOTE

that cleaning of the optical surfaces indicated in this instruction only applies to external surfaces of objectives, eyepieces, filters and condensers. Internal surfaces must always be done by your Euromex microscope distributor

** Use enough lens paper so that solvents do not dissolve oils from your hands which can make their way through the paper onto the coated surface*

bscope

NeoLED™ euromex optical technology

bScope®

versatile and evolutive!

The well-equipped microscopes of the bScope® series are intensively used in universities, small and mid-sized laboratories and in veterinary applications

The design of the bScope® is both ergonomic and evolutive. Height adjustable eye tubes and low stage controls minimize fatigue during long working sessions and thus provide more comfort for microscopists. The robust, compact size of the bScope® and the Cable Storage System allow more working space, safer operation and enable easy storage

product information

BS.1153-EPLi

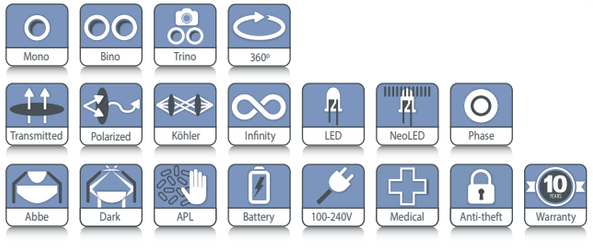

MONO: BS.1151-EPL
385 (h) x 235 (w) x 195 (d) | 6.3 kg
BINO: BS.1152-EPL / BS.1152-EPLi / BS.1152-PLi
409 (h) x 195 (w) x 235 mm (d) | 6.5 kg
TRINO: BS.1153-EPL / BS.1153-EPLi / BS.1153-PLi
459 (h) x 195 (w) x 235 mm (d) | 6.6 kg

BS.1152-PLi BS.1151-EPL

SPECIFICATIONS

EYEPIECE(S)

High wide field HWF 10x/20 mm secured eyepiece(s) with 20 mm field of view (Ø 23.2 mm tube). The eyepiece of monocular models is supplied with pointer

HEAD

The bScope® is available with a monocular head (45° inclined Ø 23.2 mm tube) or with binocular or trinocular heads equipped with a Siedentopf type head, 360° rotatable and equipped with 30° inclined Ø 23.2 mm tubes. Binocular and trinocular models have a diopter ± 5 adjustment on the left eyepiece. The interpupillary distance is adjustable between 48 to 76 mm. The models equipped with plan infinity corrected PLi objectives have a unique swiveling system of the eyepiece tubes for ergonomic positioning of both tubes in a high (431 mm) and in a low position (377 mm). The trinocular head comes with a Ø 23.2 mm tube, ensuring a maximum of flexibility and has a fixed light path beam splitter (20:80) and generates an erect image. Models with an integrated USB-2.0 camera are supplied with a 5.0 MP 1/2.5" CMOS sensor with a resolution of 2592 x 1944 pixels (see chapter 7)

NOSEPIECE

Revolving and reversed ball-bearing quadruple or quintuple nosepiece

HIGHLIGHTS

- **Versatile and evolutive microscopes**
- **Monocular, binocular and trinocular models**
- **Digital models available**
- **HWF 10x/20 mm eyepieces**
- **Reversed ball-bearing quadruple or quintuple nosepiece with slot for polarization filter**
- **E-plan, E-plan IOS and plan IOS objectives**
- **E-plan phase, E-plan phase IOS, plan phase IOS objectives**
- **Rackless integrated X-Y mechanical stage**
- **3 W NeoLED™ adjustable illumination system**
- **Darkfield cardioid condenser with 5 W NeoLED™**
- **Integrated carrying grip**
- **Cable Storage System and anti-theft system**
- **10 Years warranty**

OBJECTIVES - 45 MM PARFOCAL

The state-of-the-art production techniques and multi layer coatings used for the manufacturing of the bScope® objectives enable the bScope® to be used for the most demanding applications. World class spherical aberration correction and modern CNC and assembly technology ensure the perfect centering of the objectives

- Brightfield models: E-plan, E-plan IOS infinity corrected, plan IOS infinity corrected 4x/0.10, 10x/0.25, 20x/0.40, S40x/0.65, S60x/0.85 and S100x/1.25 oil immersion objectives
- Phase contrast models: E-plan phase, E-plan phase IOS infinity corrected, plan phase IOS infinity corrected 10x/0.25, 20x/0.40, S40x/0.65 and S100x/1.25 oil immersion objectives
- Darkfield model: E-plan 4x/0.10, 10x/0.25, 20x/0.40, S40x/0.65, S60x/0.85 objectives. The s100x/1.25 oil immersion objective has a built-in iris diaphragm

All S40x, S60x and S100x oil immersion objectives are spring loaded. All optics are anti-fungus treated and anti-reflection coated for maximum light throughput

LIFE SCIENCE
BIOLOGICAL MICROSCOPES
4

FOCUSING

Double coaxial, low-positioned coarse and fine adjustments with 180 graduations. Precision 1.1 µm, 200 µm per rotation, total travel range is approximately 19 mm. Supplied with an adjustable rack stop to prevent damage to sample and objectives. The coarse adjustment is equipped with friction control

STAGE

The bScope® is equipped with a scratch resistant 152/197 x 131 mm stage with integrated 75 x 36 mm X-Y rackless mechanical stage, Vernier scale, soft-close removable specimen holder. The rackless stage has no protruding parts, enables more smooth movements and is safer in use. Low-positioned X-Y control knobs prevent fatigue during long working sessions. The bScope® can be equipped with a heating stage which can be set up to 50° Celsius by a PID temperature controller. Only available with newly purchased microscopes

CONDENSER FOR BRIGHTFIELD

The standard height adjustable Abbe N.A. 1.25 condenser for brightfield comes with an iris diaphragm and swing-out filter holder

CONDENSER FOR ZERNIKE PHASE CONTRAST

The height adjustable Zernike NA. 1.25 phase contrast disc condenser comes with phase annuli for 10/20/S40x and S100x phase contrast objectives, an iris diaphragm, a swing-out filter holder and also a BF position for brightfield contrast. Phase contrast objectives exist in either EPL-PH, EPL-PHi or PL-PHi phase contrast versions. Supplied with alignment telescope and green filter

CONDENSER FOR SIMPLE PHASE CONTRAST

The height adjustable NA. 1.25 simple phase contrast condenser has a free slot for either a slider for 10/S40x phase contrast objectives or a slider for 20/S100x phase contrast objectives. The condenser has an iris diaphragm and filter holder. The condenser includes a BF position for brightfield contrast with an iris diaphragm and filter holder. Phase contrast objectives exist in either EPL-PH, EPL-PHi or PL-PHi versions. Supplied with alignment telescope and green filter

POLARIZATION

The bScope® has an integrated slot above the nosepiece for an optional polarization filter

NEOLED™ ILLUMINATION

The 3 W adjustable Köhler NeoLED™ diascopic illumination is powered by an internal 100-240 V power supply making it suitable for worldwide use. The innovative NeoLED™ design offers larger apertures, allowing the optical system of the bScope® microscope to produce images at higher resolutions, very close to the theoretical diffraction limit of the optics. Other benefits of the NeoLED™ is the low energy consumption, no heating and a long operating life span

Swing-out Abbe condenser 0.9/1.25 NA

Zernike phase contrast condenser with filter holder

Ergonomic carrying grip for easy transportation

DARKFIELD EQUIPMENT

The BS.1153-EPL/DF is equipped with a darkfield oil immersion cardioïd mirror condenser with a integrated 5W LED illumination and a plan PL S100x oil immersion objective with built-in iris

Darkfield cardioïd mirror condenser

KÖHLER ILLUMINATION

A Köhler illumination system ensures for all infinity corrected IOS models the highest possible contrast and the maximum achievable resolving power. It generates a uniform illumination of the sample and eliminates all interference from dust on lenses and side glare of the light source

The Köhler illumination is optional for non-IOS models

CORDLESS USE

The optional rechargeable AA batteries turn the bScope® into a cordless system

CSS – CABLE STORAGE SYSTEM

Allows users to easily stow away excess cable length into the back of the instrument during operation and to roll up the power cable for easy storage

CARRYING GRIP

The integrated carrying grip at the back of the microscope ensures safe transportation of the microscope

ANTI-THEFT SLOT

At the back of the microscope a Kensington Security Slot is placed, which can be used to secure the instrument from theft

PACKAGE CONTENT

Smart polystyrene packaging ensures a low environmental footprint while maintaining maximum safety during transport. Supplied with power cord, dust cover, tools, a spare fuse, white filter, user manual and 5 ml immersion oil

Phase contrast models are supplied with green filter and alignment telescope. An optional aluminum case can be supplied

BS.1152-PLi

BSCOPE® FOR BRIGHTFIELD AND DARKFIELD *

MODELS	Bino	Trino	digital **	HWF 10x/20 mm eyepieces	Quadruple nosepiece E-plan 4/10/S40/S100x	Quadruple nosepiece plan IOS 4/10/S40/ S100x	Quintuple nosepiece E-plan IOS 4/10/ S40/S100x	Quintuple nosepiece plan IOS 4/10/S40/ S100x	Köhler NeoLED™	Neo-LED™	2-position swiveling ergo head
BS.1152-EPL	•			•	•					•	
BS.1153-EPL		•		•	•					•	
BS.1153-EPL/DF*		•		•	•					•	
BS.1152-EPLi	•			•			•		•		•
BS.1153-EPLi		•		•			•		•		•
BS.1152-PLi	•			•				•	•		•
BS.1153-PLi		•		•				•	•		•
BS.1152-PLi/4N	•			•		•			•		•
BS.1153-PLi/4N		•		•		•			•		•
BS.1157-EPLi	•		•	•			•		•		•
BS.1157-PLi	•		•	•				•	•		•

** BS.1153-EPL/DF model is equipped with a dark field oil immersion cardioïd mirror condenser and a S100x oil immersion objective with built-in iris diaphragm*
*** For more information, see chapter 7*
Some models are also available as in vitro diagnostic medical devices class A - (EU) 2017/746. Contact your Euromex dealer

BSCOPE® FOR PHASE CONTRAST *

MODELS	Bino	Trino	HWF 10x/20 mm eyepieces	Quadruple nosepiece E-plan phase 10/20/ S40/S100x	Quintuple nosepiece E-plan phase IOS 10/20/S40/S100x	Quintuple nosepiece plan phase IOS 10/20/S40/S100x	Köhler NeoLED™	NeoLED™	2-position swiveling ergo head
BS.1152-EPLPH	•		•	•				•	
BS.1153-EPLPH		•	•	•				•	
BS.1153-EPLPHi		•	•		•		•		•
BS.1152-PLPHi	•		•			•	•		•
BS.1153-PLPHi		•	•			•	•		•

** All models can be supplied with three rechargeable AA batteries*
All models are equipped with a 152/197 x 131 mm stage with integrated 75 x 36 mm X-Y rackless mechanical stage

ACCESSORIES AND SPARE PARTS

EYEPIECES

BS.6010 HWF 10x/20 mm eyepiece, Ø 23.2 mm tube
BS.6010-P HWF 10x/20 mm with pointer, Ø 23.2 mm tube
BS.6010-C HWF 10x/20 mm eyepiece with crosshairs, Ø 23.2 mm tube
BS.6010-CM HWF 10x/20 mm eyepiece, Ø 23.2 mm tube with 10/100 micrometer and crosshairs
BS.6012 WF 12.5x/14 mm eyepiece, Ø 23.2 mm tube
BS.6015 WF 15x/11 mm eyepiece, Ø 23.2 mm tube
BS.6020 WF 20x/11 mm eyepiece, Ø 23.2 mm tube
BS.6099 Pair of eyecups

OBJECTIVES - 45 MM PARFOCAL

BS.7104 E-plan EPL 4x/0.10 objective. WD 37.0 mm
BS.7110 E-plan EPL 10x/0.25 objective. WD 6.61 mm
BS.7120 E-plan EPL 20x/0.40 objective. WD 1.85 mm
BS.7140 E-plan EPL S40x/0.65 objective. WD 0.64 mm
BS.7160 E-plan EPL S60x/0.85 objective. WD 0.20 mm
BS.7100 E-plan EPL S100x/1.25 objective. WD 0.19 mm
86.521 Plan PL S100x/1.25 oil immersion objective with built-in iris diaphragm. Working distance 0.33 mm

BS.7510 E-plan phase EPLPH 10x/0.25 objective. WD 5.95 mm
BS.7520 E-plan phase EPLPH 20x/0.40 objective. WD 2.61 mm
BS.7540 E-plan phase EPLPH S40x/0.65 objective. WD 0.66 mm
BS.7500 E-plan phase EPLPH S100x/1.25 objective. WD 0.36 mm

BS.8204 E-plan EPLi 4x/0.10 IOS infinity corrected objective. WD 18.9 mm
BS.8210 E-plan EPLi 10x/0.25 IOS infinity corrected objective. WD 5.95 mm
BS.8220 E-plan EPLi 20x/0.40 IOS infinity corrected objective. WD 2.61 mm
BS.8240 E-plan EPLi S40x/0.65 IOS infinity corrected objective. WD 0.78 mm
BS.8200 E-plan EPLi S100x/1.25 IOS infinity corrected objective. WD 0.36 mm

BS.8404 Plan PLi 4x/0.10 IOS infinity corrected objective. WD 21.0 mm
BS.8410 Plan PLi 10x/0.25 IOS infinity corrected objective. WD 5.0 mm
BS.8420 Plan PLi 20x/0.40 IOS infinity corrected objective. WD 8.8 mm
BS.8440 Plan PLi S40x/0.65 IOS infinity corrected objective. WD 0.66 mm
BS.8400 Plan PLi S100x/1.25 IOS infinity corrected objective. WD 0.36 mm

BS.8510 E-plan phase EPLPHi 10x/0.25 IOS infinity corrected objective. WD 5.95 mm
BS.8520 E-plan phase EPLPHi 20x/0.40 IOS infinity corrected objective. WD 2.61 mm
BS.8540 E-plan phase EPLPHi S40x/0.65 IOS infinity corrected objective. WD 0.76 mm
BS.8500 E-plan phase EPLPHi S IOS infinity corrected objective. WD 0.36 mm
BS.8710 Plan phase PLPHi 10x/0.25 IOS infinity corrected objective. WD 5.00 mm
BS.8720 Plan phase PLPHi 20x/0.40 IOS infinity corrected objective. WD 8.80 mm
BS.8740 Plan phase PLPHi S40x/0.65 IOS infinity corrected objective. WD 0.66 mm
BS.8700 Plan phase PLPHi S100x/1.25 IOS infinity corrected objective. WD 0.36 mm

WD = working distance

BS.1153-PLPHi

CONDENSERS

BS.9102 Abbe condenser 1,25 NA with slot for darkfield and phase contrast sliders

BS.9170 Darkfield stop for BS.9102 condenser

BS.9105 Swing-out Abbe condenser 0.9/1.25 NA

PHASE CONTRAST ATTACHMENTS

BS.9118 Zernike phase contrast kit with E-plan EPLPH 10/20/S40 and S100x oil phase contrast objectives, Zernike rotating condenser, telescope and green filter

BS.9120 Zernike phase contrast kit with E-plan EPLPHi 10/20/S40 and S100x oil phase contrast IOS infinity corrected objectives, Zernike rotating condenser, telescope and green filter

BS.9123 Zernike phase contrast kit with plan PLPH 10/20/S40 and S100x oil phase contrast objectives, Zernike rotating condenser, telescope and green filter

BS.9126 Zernike phase contrast kit with plan PLPHi 10/20/S40 and S100x oil phase contrast IOS infinity corrected objectives, Zernike rotating condenser, telescope and green filter

BS.9164 Phase contrast kit with Abbe condenser with slot for slider. Plan PLPHi phase S40x contrast objectives, slider with 40x annuli only, telescope and green filter

BS.9194 Slider with phase contrast annuli 40x. Needs BS.9102 condenser with slot

BS.9148 Alignment telescope for bScope® IOS version with Ø 30 mm tubes

BS.9149 Alignment telescope for bScope® non IOS version with Ø 23.2 mm tubes

BS.9156 Phase contrast kit with Abbe condenser with slot for slider. E-plan EPLPH 10/S40x phase contrast objectives, slider with 10 and 40x annuli, telescope and green filter

BS.9157 Phase contrast kit with Abbe condenser with slot for slider. E-plan EPLPH 20/S100x phase contrast objectives, slider with 20 and 100x annuli, telescope and green filter

BS.9158 Phase contrast kit with Abbe condenser with slot for slider. E-plan EPLPH i 10/S40x phase contrast infinity corrected objectives, slider with 10 and 40x annuli, telescope and green filter

BS.9159 Phase contrast kit with Abbe condenser with slot for slider. E-plan EPLPHi 20/S100x phase contrast infinity corrected objectives, slider with 20 and 100x annuli, telescope and green filter

BS.9162 Phase contrast kit with Abbe condenser with slot for slider. Plan PLPH i 10/S40x phase contrast infinity corrected objectives, slider with 10 and 40x annuli, telescope and green filter

BS.9163 Phase contrast kit with Abbe condenser with slot for slider. Plan PLPHi 20/S100x phase contrast infinity corrected objectives, slider with 20 and 100x annuli, telescope and green filter

POLARIZATION ATTACHMENTS

BS.9660 Polarization kit: analyzer under head and polarizer on lamphouse

AE.5152-N Small rotatable stage to be used with BS.9660

BS.9647 Polarization polarizer Ø 16 mm for slider under bScope® head

BS.9651 Polarization attachment for lamphouse of bScope® with 360° scale

MISCELLANEOUS

BS.9880 Köhler attachment

BS.9577-L Add-on for left handed mechanical stage (only with new purchased microscope

BS.9870 Mirror attachment for bScope

AE.5152-N, small rotatable stage

BS.9900 Aluminum transport case

AE.9919 Nylon bag for bScope. 58(h) x 32(w) x 24(d)

BS.9993 NeoLED™ replacement unit

AE.1370 Set of rechargeable AA batteries, three pieces

AE.5226 Glass fuses 3A 250V, 10pcs

CAMERA ACCESSORIES

AE.5130 Universal Ø 23.2 mm tube adapter with built-in 2x lens for SLR photo camera with APS-C sensor. Needs T2 adapter

AE.5025 T2 adapter for Nikon D SLR digital camera

AE.5040 T2 adapter for Canon EOS SLR digital camera

DISPOSABLES

PB.5155 Microscope slides 76 x 26 mm, ground edges, 50 pieces per pack

PB.5157-W Microscope slides 76 x 26 mm, ground edges and frosted side white color, 50 pieces per pack

PB.5157-B Microscope slides 76 x 26 mm, ground edges and frosted side blue color, 50 pieces per pack

PB.5160 Microscope slides 76 x 26 mm with cavity, grinded edges. 10 pieces per pack

PB.5165 Cover glasses 18 x 18 mm, thickness 0.13-0.17 mm, 100 pieces

PB.5168 Cover glasses 22 x 22 mm, thickness 0.13-0.17 mm, 100 pieces

PB.5245 Lens cleaning paper, 100 sheets per pack

PB.5255 Immersion oil (25 ml). n = 1.515

PB.5274 Isopropyl alcohol 99% (200 ml)

PB.5275 Cleaning kit: lens cleaning fluid, lint free lens tissue/paper, brush, air blower, cotton swabs

PB.5276 Microscope maintenance and servicing kit, 16pcs: cleaning brush, 6 pcs screwdriver set, air blower, 3 pcs Allen key, 1.5, 2, 2.5 mm, lens cleaning fluid 20 ml, cleaning cloth 140 x 140 mm, 100 pcs lens tissue sheets, tube of maintenance grease, 10 ml bottle of oil, packed in a nice toolbox

DIMENSIONS

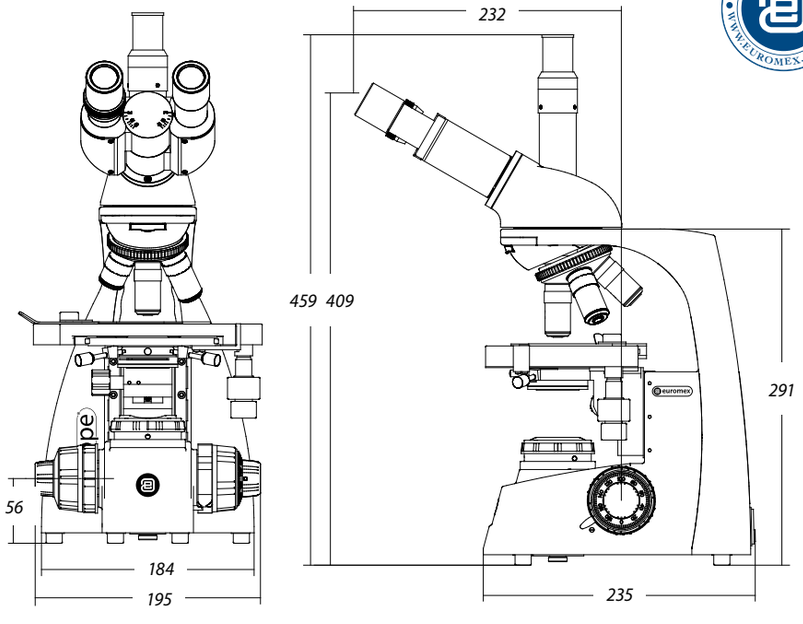

Delphi-X Observer

the standard in histopathology, cytology, dermatopathology and forensic pathology

4 LIFE SCIENCE
BIOLOGICAL MICROSCOPES

Delphi-X Observer | Delphi-X Observer fluorescence | Delphi-X Inverso | Delphi-X Inverso fluorescence

The Delphi-X Observer enables pathologists to examine their samples with the highest detail and with the largest field of view. Together with a powerful and stable light spectrum of a high performance LED it meets the ultimate standards. **Histopathology** is the microscopic examination of tissues, taken either as biopsy samples or resection specimens. **Cytology** studies diseases on the cellular on samples of free cells or tissue fragments. **Dermatopathology** is a subspecialty of dermatology and pathology that studies cutaneous diseases. **Forensic pathology** focuses on determining the cause of death by examining a corpse

Delphi-X observer

NeoLED™ euromex optical technology

Delphi-X Observer™

State-of-the-art microscopes for advanced life science applications. The outstanding optical performance of the Delphi-X Observer™ with 25 mm field of view and high numerical aperture of the plan 60 mm parfocal EIS objectives enable perfect observations, color rendering and at high resolving power. This is the perfect microscope for anatomy pathologists

DX.2153-APLi

product information

Trino | Transmitted | Köhler | Infinity | DIC

LED | NeoLED | Halogen | HG-HBO | Phase | Abbe | 100-240V | Medical | Warranty

DX.1153-PLi
454 (h) x 260 (w) x 367 mm (d) | 18 kg
DX.2153-PLi
454 (h) x 260 (w) x 480 mm (d) | 18.5 kg

HIGHLIGHTS

- **Trinocular model**
- **Sextuple reversed nosepiece with slot for DIC**
- **Super wide field SWF 10x/25mm eyepieces, Ø 30 mm tubes**
- **Enhanced infinity corrected EIS optical system**
- **Ergonomic tilting head**
- **60 mm parfocal plan EIS objectives**
- **60 mm parfocal plan semi-apochromatic EIS objectives**
- **M25 objective thread mounting**
- **3 W NeoLED™ illumination**
- **100 W halogen illumination**
- **Face-to-face dual head system**
- **Multihead systems**
- **Brightfield, darkfield, phase contrast**
- **Differential Interference Contrast (DIC)**

Ergonomic tilting head

SPECIFICATIONS

EYEPIECES

- Super wide field SWF 10x/25 mm, Ø 30 mm tubes
- Extended wide field EWF 10x/22 mm, Ø 30 mm tubes

STANDARD HEAD

Siedentopf trinocular head with 30° inclined tubes. Interpupillary distance adjustable between 47 and 78 mm. The trinocular standard head has an optical path selector (100:0 / 80:20 / 0:100). Diopter ± 5 adjustments on both eyepieces

ERGONOMIC TILTING HEAD

Optional ergonomic 0° to 35° tilting trinocular head supplied with SWF 10x/25 mm eyepieces, interpupillary distance between 47-78 mm and photo tube, standard with a Ø 23.2 mm tube. The trinocular tilting head has an optical path selector (100:0 / 80:20 / 0:100). Diopter ± 5 adjustments on both eyepieces

FACE-TO-FACE DUAL HEAD SYSTEM

The Delphi-X Observer™ can be supplied with two binocular heads in a face-to-face configuration, allowing simultaneous observation by two operators. The main binocular head is equipped with super wide field SWF 10x/25 mm eyepieces and the second head with EWF 10x/22 mm eyepieces. A joystick enables the operator to move a green or red laser pointer across the entire field of view of both heads

MULTIHEAD SYSTEM

The Delphi-X-Observer™ can be extended with a multihead system for two, three, five or ten users. The central attachment is equipped with a joystick to move a green and red laser pointer across the entire field of view of all heads. The multihead systems with two, three or five heads and 30° inclined tubes are supplied with super wide field SWF 10x/25 mm eyepieces. The multihead systems with ten heads and 30° inclined tubes have the trinocular main head equipped with super wide field SWF 10x/25 mm eyepieces and the other nine binocular heads with extended wide field EWF 10x/22 mm eyepieces. The Delphi-X Observer™ multihead system with ten heads is supplied without the iCare sensor

DX.2156-PLi/10

NOSEPIECE

Revolving sextuple reversed nosepiece on ball-bearings with M25 objectives mounting threads

MOTORIZED MODEL

The Delphi-X Observer™ can be supplied with a motorized revolving sextuple reversed nosepiece together with a flip-down condenser. A precise step-motor allows the user to switch from objective by a simple push on a button. Another button allows quick switching between two preselected objectives. The electronics memorize automatically the light intensity levels for each objective after switching. The electronics also automatically flip out the front lens of the flip-down condenser when the 4x objective is used

Motorized nosepiece

OBJECTIVES

Plan (PLi)	2x/0.06*	4x/0.10	10x/0.25	20x/0.40	S40x/0.65	S50x/ 0.95 oil*	S60x/ 0.80*	S100x/1.25 oil	S100x/ 1.25 oil iris*
Plan phase (PLPHi)			10x/0.25	20x/0.40	S40x/0.65			S100x/1.25 oil	
Plan semi-apo (PLi Apo)		4x/0.13	10x/0.30	20x/0.50	S40x/0.75			S100x/1.30 oil	

All objectives are 60 mm parfocal and have a M25 mounting thread, all optics are anti-fungus treated and anti-reflection coated for maximum light throughput and all S40x, S50x, S60x and S100x objectives are spring loaded
** Optional*

ENHANCED INFINITY SYSTEM (EIS)

The enhanced infinity system (EIS) of the Delphi-X Observer™ consists of super wide field SWF 10x25 mm eyepieces, high numerical aperture, 60 mm parfocal objectives and a 200 mm focal length tube lens. This focal length tube lens reduces the angle of the light rays passing the optics and as a direct result it improves significantly the chromatic aberration corrections and contrast. The objectives with larger diameter enable much higher numerical apertures improving the overall resolving power of the optical system. For all these reasons the Delphi-X Observer™ offers superior optical performance for the most demanding applications

PLAN ACHROMATIC EIS OBJECTIVES (CLINICAL ROUTINE APPLICATIONS)

The Delphi-X Observer™ comes with plan achromatic 4x/0.10, 10x/0.25, 20x/0.40, S40x/0.65 and S100x/1.25 oil immersion infinity corrected EIS objectives

As an option available: 2x/0.06 , S50x/0.95 (oil immersion) and S60x/0.80

PLAN SEMI-APOCHROMATIC OBJECTIVES (ANATOMO- AND HISTOPATHOLOGY APPLICATIONS)

The Delphi-X Observer™ can also be supplied with plan semi-apochromatic Fluarex 4x/0.13, 10x/0.30, 20x/0.50, S40x/0.75 and S100x/1.30 (oil immersion) infinity corrected EIS objectives

PLAN PHASE CONTRAST OBJECTIVES

The Delphi-X Observer™ with phase contrast is supplied with Plan phase EIS 10x/0.25, 20x/0.40, s40x/0.65 and s100x/1.25 (oil immersion) infinity corrected EIS objectives

STAGE

The 190 x 152 mm stage has a 78 x 32 mm integrated right-handed mechanical stage. Comes with scratch-resistant Gorilla glass. Sapphire scratch-resistant glass is available on request. Left-handed mechanical stage is also available on request

Sextuple nosepiece

FOCUSING

Coaxial coarse and fine adjustment, 100 graduations, 1 µm precision, 100 µm per rotation, total travel range is approx. 35 mm. Supplied with an adjustable rack stop to prevent damage to sample and objectives. The coarse adjustments are equipped with friction control. The focusing knobs can be switched from left to right according to the user's preference

CONDENSER FOR BRIGHTFIELD

In height adjustable N.A. 0.90/1.25 Abbe swing-out condenser with numerical aperture identification marks. Models with a motorized nosepiece are supplied with a motorized condenser that automatically flips out the front lens of the condenser when the 4x objective is used

CONDENSER FOR PHASE CONTRAST

In height adjustable N.A. 1.25 Zernike phase contrast condenser with phase annuli for 10/20/40x and S100x-oil objectives. To be used with the phase contrast objectives

DIFFERENTIAL INTERFERENCE CONTRAST (DIC)

The Nomarski differential interference contrast technique helps to enhance contrast of samples and lets samples appear as three-dimensional objects. The equipment consist of a specific rotating DIC condenser, two Nomarski modified Wollaston prisms, a DIC slider for insertion into the slot of the sextuple reversed nosepiece and a polarizer

DIASCOPIC ILLUMINATION

Two Köhler illuminations are available for the Delphi-X Observer™ microscope:

- Diascopic intensity adjustable 3 W NeoLED™ Köhler illumination with internal 100-240 V power supply
- Diascopic intensity adjustable 100 W halogen Köhler illumination with internal 100-240 V power supply

The diascopic halogen illumination comes with two push-in/push-out neutral density filters for smooth attenuation of the light intensity for all kinds of samples. The diascopic NeoLED™ illumination comes with one neutral density filter

LIGHT INTENSITY MEMORY FUNCTION (LIM)

LIM automatically saves preferred brightness while changing magnifications. It eliminates the need for adjusting lamp brightness when changing magnification. This allows maintaining preferred brightness at each magnification, thus improving user efficiency significantly and reducing eye strain. Standard on all models with a motorized nosepiece, for other models see ordering instructions below

For ordering Automatic light intensity memory function

Example: DX.1153-PLi = DX.1153-PLi/LIM model but with automatic light control

NEOLED™

The innovative NeoLED™ design is a combination of a custom LED and a specially designed thin lens with a short focal length in order to obtain three main benefits:

- More oblique light from the LED light source can be captured, which increases the light output significantly
- Less energy is required to achieve this level of light intensity
- The larger aperture of NeoLED™ allows the optical system to produce images at higher resolutions, very close to the theoretical diffraction limit of the optics

ICARE SENSOR

The unique iCare Sensor is developed to avoid unnecessary loss of energy. The illumination of the microscope automatically switches off shortly after the microscopist steps away from the microscope

CARRYING GRIP

The carrying grip at the back of the microscope ensures safe transportation of the microscope and the integrated tool & holder makes sure the right tool is always available

PACKAGE CONTENT

Supplied with power cord, dust cover, a spare fuse, user manual and 5 ml immersion oil. All packed in a polystyrene box

iCare sensor

Nosepiece lowering attachment (DX.9887)

Eye-level riser (DX.9885)

DIMENSIONS

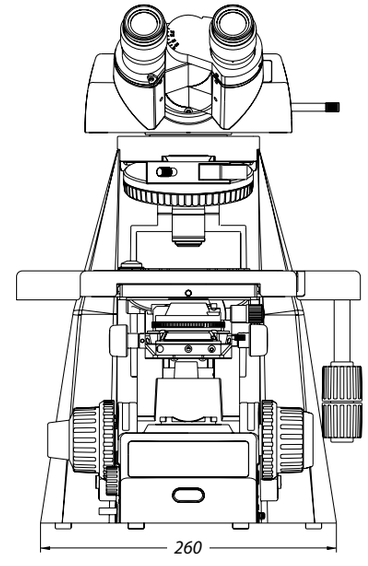

Delphi-X Observer™ motorized

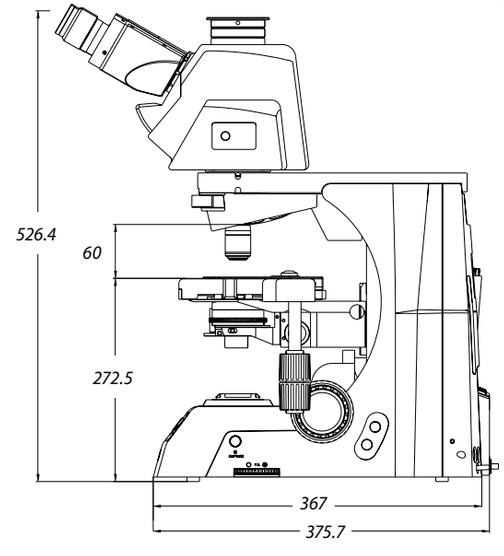

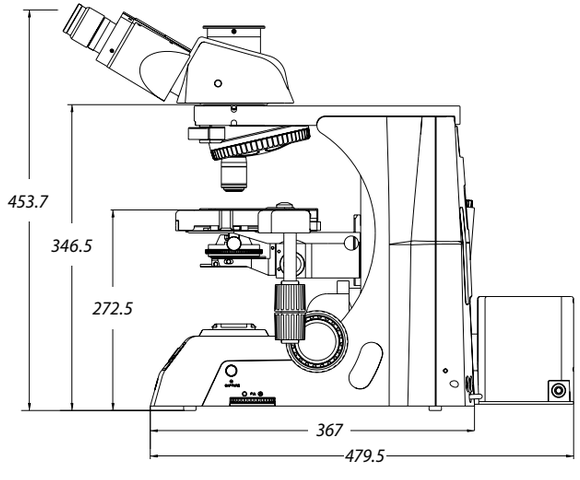

STANDARD MODELS

MODELS	Ergonomic tilting head	SWF 10x/25 mm eyepieces	Sextuple nosepiece	Plan 4/10/20/ S40 EIS objectives	S100x oil EIS objective	Plan semi-apo 4/10/20/S40/S100x oil EIS objectives	Plan phase 10/20/ S40/ S100x oil EIS objectives	3 W NeoLED™ Köhler	100 W 24 V halogen Köhler
DX.1053-PLi		•	•	•				•	
DX.1153-PLi		•	•	•	•			•	
DX.1158-PLi	•	•	•	•	•			•	
DX.1153-APLi		•	•			•		•	
DX.1158-APLi	•	•	•			•		•	
DX.1153-PLPHi		•	•				•	•	
DX.1158-PLPHi	•	•	•				•	•	
DX.2053-PLi		•	•	•					•
DX.2153-PLi		•	•	•	•				•
DX.2158-PLi	•	•	•	•	•				•
DX.2153-APLi		•	•			•			•
DX.2158-APLi	•	•	•			•			•
DX.2153-PLPHi		•	•				•		•
DX.2158-PLPHi	•	•	•				•		•

Some models are also available as in vitro diagnostic medical devices class A - (EU) 2017/746. Contact your Euromex dealer

DX.1153-PLi

MOTORIZED MODELS

MODELS	Ergonomic tilting head	SWF 10x/25 mm eyepieces	Sextuple nosepiece	Plan 4/10/20/ S40/ S100x oil EIS objectives	Plan semi-apo 4/10/20/ S40/S100x oil EIS objectives	3 W NeoLED™ Köhler	100 W 24 V halogen Köhler
DX.1173-PLi		•	•	•		•	
DX.1178-PLi	•	•	•	•		•	
DX.1173-APLi		•	•		•	•	
DX.1178-APLi	•	•	•		•	•	
DX.2173-PLi		•	•	•			•
DX.2178-PLi	•	•	•	•			•
DX.2173-APLi		•	•		•		•
DX.2178-APLi	•	•	•		•		•

For ordering more motorized models, substitute the third digit 5" of the model reference with the digit 7"
Example: DX.1173-PLi = DX.1153-PLi model but with motorized nosepiece, flip-down condenser and automatic light control
Some models are also available as in vitro diagnostic medical devices class A - (EU) 2017/746. Contact your Euromex dealer

FACE-TO-FACE DUAL HEAD SYSTEMS

MODELS	Total users	Trinocular head SWF 10x/25 mm eyepieces	Binocular head SWF 10x/22 mm eyepieces	Sextuple nosepiece	Plan 4/10/20/ S40/ S100x oil EIS objectives	Plan semi-apo Fluarex 4/10/20/ S40/S100x oil EIS objectives	Plan phase 10/20/S40/ S100x oil EIS objectives	3 W NeoLED™ Köhler	100 W 24 V halogen Köhler
DX.1154-PLi	2	1x	1x	•	•			•	
DX.1154-APLi	2	1x	1x	•		•		•	
DX.1154-PLPHi	2	1x	1x	•			•	•	
DX.2154-PLi	2	1x	1x	•	•				•
DX.2154-APLi	2	1x	1x	•		•			•
DX.2154-PLPHi	2	1x	1x	•			•		•

Some models are also available as in vitro diagnostic medical devices class A - (EU) 2017/746. Contact your Euromex dealer

MULTIHEAD SYSTEMS

MODELS	Total users	Trinocular head SWF 10x/25 mm eyepieces	Number of binocular heads	Binocular head SWF 10x/25 mm eyepieces	Sextuple nose-piece	Plan 4/10/20/ S40/ S100x oil EIS objectives	Plan semi-apo Fluarex 4/10/20/S40/ S100x oil EIS objectives	Plan phase 10/20/S40/ S100x oil EIS objectives	3 W NeoLED™ Köhler	100 W 24 V halogen Köhler
DX.1156-PLi/2	2	1x	1	•	•	•			•	
DX.1156-PLi/3	3	1x	2	•	•	•			•	
DX.1156-PLi/5	5	1x	4	•	•	•			•	
DX.1156-PLi/10	10	1x	9 [1]	•	•	•			•[2]	
DX.1156-APLi/2	2	1x	1	•	•		•		•	
DX.1156-APLi/3	3	1x	2	•	•		•		•	
DX.1156-APLi/5	5	1x	4	•	•		•		•	
DX.1156-APLi/10	10	1x	9 [1]	•	•		•		•[2]	
DX.1156-PLPHi/2	2	1x	1	•	•			•	•	
DX.1156-PLPHi/3	3	1x	2	•	•			•	•	
DX.1156-PLPHi/5	5	1x	4	•	•			•	•	
DX.1156-PLPHi/10	10	1x	9 [1]	•	•			•	•[2]	
DX.2156-PLi/2	2	1x	1	•	•	•				•
DX.2156-PLi/3	3	1x	2	•	•	•				•
DX.2156-PLi/5	5	1x	4	•	•	•				•
DX.2156-PLi/10	10	1x	9 [1]		•	•				•
DX.2156-APLi/2	2	1x	1	•	•		•			•
DX.2156-APLi/3	3	1x	2	•	•		•			•
DX.2156-APLi/5	5	1x	4	•	•		•			•
DX.2156-APLi/10	10	1x	9 [1]		•		•			•
DX.2156-PLPHi/2	2	1x	1	•	•			•		•
DX.2156-PLPHi/3	3	1x	2	•	•			•		•
DX.2156-PLPHi/5	5	1x	4	•	•			•		•
DX.2156-PLPHi/10	10	1x	9 [1]		•			•		•

[1] The model with 9 binocular heads (10 users) is supplied with EWF 10x/22 mm eyepieces
[2] Supplied with 5 W NeoLED™ Köhler, without iCare sensor
Some models are also available as in vitro diagnostic medical devices class A - (EU) 2017/746. Contact your Euromex dealer

ACCESSORIES AND SPARE PARTS

EYEPIECES

DX.6010 Super wide field SWF 10x/25 mm eyepiece
DX.6010-CM Super wide field SWF 10x/25 mm eyepiece with micrometer and crosshairs
DX.6210 Super wide field SWF 10x/22 mm eyepiece
DX.6210-CM Super wide field SWF 10x/22 mm eyepiece with micrometer and crosshairs
DX.6012 Wide field WF 12.5x/17.5 mm eyepiece
DX.6015 Wide field WF 15x/16 mm eyepiece
DX.6020 Wide field WF 20x/12 mm eyepiece
DX.6099-L Eyecups for eyepiece
DX.6099-N Eyeshade for eyepieces

OBJECTIVES

DX.7201 Infinity EIS 60 mm Plan PLi 1x/0.04 objective. WD 3.2 mm
DX.7202 Infinity EIS 60 mm Plan PLi 2x/0.06 objective. WD 7.5 mm
DX.7204 Infinity EIS 60 mm Plan PLi 4x/0.10 objective. WD 30 mm
DX.7210 Infinity EIS 60 mm Plan PLi 10x/0.25 objective. WD 10.2 mm
DX.7220 Infinity EIS 60 mm Plan PlLi 20x/0.40 objective. WD 12 mm
DX.7240 Infinity EIS 60 mm Plan PLi S40x/0.65 objective. WD 0.7 mm
DX.7250 Infinity EIS 60 mm Plan PLi S50x/0.95 oil objective. WD 0.19 mm
DX.7260 Infinity EIS 60 mm Plan PLi S60x/0.80 objectives. WD 0.3 mm
DX.7200 Infinity EIS 60 mm Plan PLi S100x/1.25 oil immersion objective. WD 0.2 mm
DX.7200-I Infinity EIS 60 mm Plan PLi S100x/1.25 oil immersion objective with built-in iris diaphragm. WD 0.2 mm
DX.7200-W Infinity EIS 60 mm Plan PLi S100x/1.25 water immersion objective. Working distance 0.2 mm
DX.7304 Infinity EIS 60 mm plan semi-apochromatic PLi-apo Fluarex 4x/0.13 objective. WD 16.5 mm
DX.7310 Infinity EIS 60 mm plan semi-apochromatic PLi-apo Fluarex 10x/0.30 objective. WD 8.1 mm
DX.7320 Infinity EIS 60 mm plan semi-apochromatic PLi-apo Fluarex 20x/0.50 objective. WD 2.1 mm
DX.7340 Infinity EIS 60 mm plan semi-apochromatic PLi-apo Fluarex S40x/0.75 objective. WD 0.7 mm
DX.7300 Infinity EIS 60 mm plan semi-apochromatic PLi-apo Fluarex S100x/1.30 oil immersion objective. WD 0.15 mm
DX.7710 Infinity plan phase PLPHi 10x/0.25 objective
DX.7720 Infinity plan phase PLPHi 20x/0.40 objective
DX.7740 Infinity plan phase PLPHi S40x/0.65 objective
DX.7700 Infinity plan phase PLPHi S100x/1.25 oil objective

STAGES

DX.9501-R Stage with Gorilla glass. Right handed
DX.9501-L Stage with Gorilla glass. Left handed
DX.9504-R Stage with Sapphire glass. Right handed
DX.9504-L Stage with Sapphire glass. Left handed
DX.9501-LG Option for left handed stage with Gorilla glass*
DX.9504-RS Option for right handed stage with Sapphire glass*
DX.9504-LS Option for left handed stage with Sapphire glass*
DX.9522 X-Y stranslation 30 x 30 mm stage for round stage

** Only with new Delphi-X Observer™ microscopes (resp. DX.xx5x-xxx/LG, DX.xx5x-xxx/RS and DX.xx5x-xxx/LS)*
WD = Working distance

PHASE CONTRAST EQUIPMENT

DX.9126 Phase contrast set with 10/20/S40 and S100x oil objectives, supplied with rotating disc phase contrast condenser with phase annuli and alignment telescope
DX.9140 Rotating disc phase contrast condenser with phase annuli without objectives
DX.9148 Alignment telescope for phase contrast, Ø 30 mm tube

CONDENSERS

DX.9105 Abbe condenser with 0.9/1.25 swing-out front lens
DX.9110 Dry darkfield condenser
DX.9112 Oil immersion darkfield condenser

POLARIZER

DX.9660 Simple polarization kit
DX.9662 Special polarization kit for gout

DIFFERENTIAL INTERFERENCE CONTRAST

DX.9690 Rotating DIC and BF disc condenser without DIC prisms for Life Science Delphi Observer models. Needs one or more DIC-prisms (DX.9690-10 / DX.9690-24 / DX.9690-100) and corresponding slider with prism (DX.9693 / DX.969). To be used with DX.9695.
DX.9690-10 DIC prism for rotating disc condenser (DX.9690). To be used with Plan Semi-Apo 10x objective
DX.9690-24 DIC prism for rotating disc condenser (DX.9690). To be used with Plan Semi-Apo 20x objective and/or with Plan Semi-Apo 40x objective
DX.9690-100 DIC prism for rotating disc condenser (DX.9690). To be used with Plan Semi-Apo 100x objective
DX.9693 Slider with DIC prism for nosepiece and to be used with Plan semi-Apo 10x and 20x objectives
DX.9694 Slider with DIC prism for nosepiece and to be used with Plan semi-Apo 40x and 100x objectives
DX.9695 DIC polarizer for transmitted light

CAMERA ACCESSORIES

DX.9810 C-mount with 1x magnification for C-mount camera
DX.9835 C-mount with high resolution relay 0.35x objective for 1/3 inch C-mount camera
DX.9850 C-mount with high resolution relay 0.50x objective for 1/2 inch C-mount camera
DX.9863 C-mount with high resolution relay 0.63x objective for 2/3 inch C-mount camera
AE.5130 Universal SLR adapter with built-in 2x lens for standard 23.2 mm tube. Needs T2 adapter
AE.5025 T2 adapter for Nikon D SLR digital camera
AE.5040 T2 adapter for Canon EOS SLR digital camera

MISCELLANEOUS

DX.0070-ADD Motorized nosepiece and automatic light intensity control function for Delphi-X Observer (not for Materials Science models). Only available with the purchase of a new microscope)
DX.9704 Yellow filter for lamphouse, diameter 45 mm
DX.9885 25.4 mm eye-level riser (1 inch)
DX.9887 40 mm nosepiece and stage lowering attachment
DX.9960 100 Watt 24 V halogen bulb (revision 1 models)
DX.9961 100 Watt 12 V halogen bulb (revision-2 models)
DX.9993 3 Watt LED replacement
AE.5214 500 mA 250 V fuses for LED models, 10 pieces
AE.5216 5 A 250 V fuses for Halogen models, 10 pieces

DISPOSABLES

PB.5155 Microscope slides 76 x 26 mm, ground edges, 50 pieces per pack
PB.5157-W Microscope slides 76 x 26 mm, ground edges and frosted side white color, 50 pieces per pack
PB.5157-B Microscope slides 76 x 26 mm, ground edges and frosted side blue color, 50 pieces per pack
PB.5160 Microscope slides 76 x 26 mm with cavity, ground edges. 10 pieces per pack
PB.5165 Cover glasses 18 x 18 mm, 0.13-0.17 mm, 100 pieces
PB.5168 Cover glasses 22 x 22 mm, 0.13-0.17 mm, 100 pieces
PB.5245 Lens cleaning paper, 100 sheets per pack
PB.5255 Immersion oil, 25 ml. Refraction index n = 1.515
PB.5274 Isopropyl alcohol 99%, 200 ml
PB.5275 Cleaning kit: lens fluid, lint free lens tissue/ paper, brush, air blower, cotton swabs

4 LIFE SCIENCE BIOLOGICAL MICROSCOPES

Oxion

NeoLED™ euromex optical technology

OX.3035

Oxion

The microscopes of the Oxion series are dedicated to professionals in life sciences applications, laboratories of universities or research centers

Thanks to the high resolution optics and state-of-the-art components, these microscopes can be widely used from routine to fundamental research applications

product information

Bino | Trino | Transmitted | Köhler | NeoLED | Phase | Abbe | Dark | 100-240V | Warranty

OX.3035 TO OX.3065
397 (h) x 185 (w) x 294 mm (d) | 7.5 kg

HIGHLIGHTS

- **HWF 10x/22 mm eyepieces**
- **Binocular, trinocular and multihead systems**
- **Optional tilting head**
- **Reversed nosepiece for a maximum of five objectives**
- **Semi plan, plan and plan phase contrast IOS objectives**
- **150 x 140 mm stage**
- **Optional ceramic stage**
- **Abbe condenser and Zernike condenser for phase contrast**
- **3 W LED illumination for brightfield and phase contrast**
- **5 W LED illumination for darkfield applications**
- **Ergonomic stand and head**
- **10 Years warranty**

Ergonomic tilting head

SPECIFICATIONS

EYEPIECES

HWF 10X/22 mm eyepieces with ± 5° diopter adjustments on both eyepieces. The multihead systems OX.56xx are supplied with WF 10x/20 mm eyepieces and a joystick for the positioning of a pointer in the field of view of the eyepieces. All eyepieces can be secured with an Allen screw

HEAD

Binocular and trinocular Siedentopf type heads with 30° inclined tubes. Interpupillary distance from 50 to 75 mm. A unique rotating system allows an ergonomic positioning of both tubes in an upper (431 mm) and in a lower position (397 mm). An ergonomic tilting head is also available (OX.5700-ADD)

NOSEPIECE

Reversed nosepiece for a maximum of five objectives on ball-bearings

OBJECTIVES

IOS Infinity corrected system

- Semi plan 4x/0.10, 10x/0.25, S40x/0.65 and S100x/1.25 oil immersion IOS objectives
- Plan 4x/0.10, 10x/0.25, S40x/0.65 and S100x/1.25 oil immersion IOS objectives
- Plan phase contrast 10x/0.25, 20x/0.45, S40x/0.65 and S100x/1.25 oil immersion IOS objectives
- Plan semi apochromatic Fluarex 4x/0.10, 10x/0.25, S40x/0.65 and S100x/1.25 oil immersion IOS objectives

All S40x, S60x and S100x oil immersion objectives are spring loaded
All optics have an anti-reflection coating for maximum light throughput and are anti-fungus treated

STAGE

150 x 140 mm stage with integrated 76 x 50 mm X-Y mechanical stage

The Oxion can be supplied with a heating stage which can be set up to 50° Celsius by a PID temperature controller. Only available with new microscopes. Higher temperatures can be achieved on special request

CONDENSER FOR BRIGHTFIELD

Height adjustable Abbe condenser N.A. 1.25 with iris diaphragm. Phase contrast rings mounted in slider can be inserted in the condenser for 10x and S40x or 20x and S100x phase contrast objectives. A darkfield stop in slider for the 10x, 20x and S40x objectives can also be inserted with magnification indication

FOCUSING

Coaxial coarse and fine adjustments, 200 graduations, 1 µm per graduation, 200 µm per rotation, total travel range is approximately 28 mm. Supplied with an adjustable rack stop to prevent damage to sample and objectives.
The coarse adjustments are equipped with friction control

PACKAGE CONTENT

Supplied with power cord, dust cover, a spare fuse, user manual and 5 ml immersion oil. All packed in a polystyrene box. An optional aluminum case can be supplied

Ceramic stage (mounted on an OX.3035)

MODELS	Binocular	Trinocular	Eyepieces HWF 10x/22mm	Plan4x/10x/S40x/S100x IOS objectives	Plan semi apo 4x/10x/ S40x/100x objectives	5 W LED illumination
OX.3030	•		•	•		•
OX.3035		•	•	•		•
OX.3065		•	•		•	•

ACCESSORIES AND SPARE PARTS

EYEPIECES

AE.3210 HWF 10x/22 mm eyepiece
AE.3215 HWF 15x/13 mm eyepiece
AE.3223 HWF 10x/22 mm eyepiece with 10 mm/100 micrometer
AE.3225 Pair of eyecups

OBJECTIVES

AE.3160 Semi plan 4x/0.10 infinity corrected IOS objective. WD 15 mm
AE.3162 Semi plan 10x/0.25 infinity corrected IOS objective. WD 15 mm
AE.3166 Semi plan S40x/0.65 infinity corrected IOS objective. WD 0.42 mm
AE.3168 Semi plan S60x/0.85 infinity corrected IOS objective. WD 0.12 mm
AE.3170 Semi plan S100x/1.25 oil immersion infinity corrected IOS objective. WD 0.19 mm
AE.3102 Plan 2x/0.06 infinity corrected IOS objective WD 4.1 mm
AE.3104 Plan 4x/0.10 infinity corrected IOS objective. WD 11.9 mm
AE.3106 Plan 10x/0.25 infinity corrected IOS objective. WD 12.1 mm
AE.3108 Plan 20x/0.40 infinity corrected IOS objective. WD 1.5 mm
AE.3110 Plan S40x/0.65 infinity corrected IOS objective. WD 0.36 mm
AE.3112 Plan S60x/0.85 infinity corrected IOS objective. WD 0.30 mm
AE.3114 Plan S100x/1.25 oil immersion infinity corrected IOS objective. WD 0.18 mm
AE.3144 Plan semi apochromatic Fluarex 4x/0.13 infinity corrected IOS objective. WD 18.5 mm
AE.3146 Plan semi apochromatic Fluarex 10x/0.30 infinity corrected IOS objective. WD 10.6 mm
AE.3148 Plan semi apochromatic Fluarex 20x/0.50 infinity corrected IOS objective. WD 2.33 mm
AE.3152 Plan semi apochromatic Fluarex S40x/0.75 infinity corrected IOS objective. WD 0.6 mm
AE.3156 Plan semi apochromatic Fluarex S100x/1.28 oil immersion infinity corrected IOS objective. WD 0.21 mm
AE.3126 Plan phase 10x/0.25 infinity corrected IOS objective. WD 12.1 mm
AE.3128 Plan phase 20x/0.45 infinity corrected IOS objective. WD 1.5 mm
AE.3130 Plan phase S40x/0.65 infinity corrected IOS objective. WD 0.36 mm
AE.3134 Plan phase S100x/1.25 oil immersion infinity corrected IOS objective. WD 0.18 mm

WD = Working distance

PHASE CONTRAST ATTACHMENTS

AE.3180 Telescope for alignment of phase contrast rings
AE.3187 Slider with phase rings for 10x and S40x plan phase contrast objectives
AE.3189 Slider with phase rings for 20x and S100x oil plan phase contrast objectives

POLARIZATION ATTACHMENTS

AE.3190 Polarizer/analyzer set
AE.3192 Polarizer slider for nosepiece
AE.3194 Polarizer for lamphouse

FILTERS

AE.3196 Frosted filter 45 mm, to be mounted on lamphouse
AE.3198 Blue glass filter 45 mm, to be mounted on lamphouse
AE.3200 Yellow glass filter 45 mm, to be mounted on lamphouse
AE.3202 Green glass filter 45 mm, to be mounted on lamphouse

Polarizer slider for nosepiece

Polarizer for lamphouse

CAMERA ACCESSORIES

AE.5120 Trinocular 23.2 mm tube for Oxion revision 1 photo port

AE.5120-2 Trinocular 23.2 mm tube for Oxion revision-2 photo port

AE.5130 Universal SLR camera adapter for 23.2 mm tubes with built-in 2x magnification lens. Needs T2 adapter and OX.5120

AE.5025 T2 adapter for Nikon D digital SLR cameras

AE.5040 T2 adapter for Canon EOS digital SLR cameras

MISCELLANEOUS

AE.3185 Slider with darkfield stop (only for objectives 10x, 20x and S40x)

OX.9810 CS/C mount with 1.0x objective

OX.9833 C-mount adapter with 0.33x objective for Oxion microscopes and 1/3" cameras

OX.9850 C-mount adapter with 0.5x objective for Oxion and Oxion Inverso microscopes and 1/2" cameras

AE.5168-O Heating stage and temperature controller up to 50°C. Only supplied with newly purchased microscopes

SL.5510 LED replacement for Oxion

AE.3199 Glass fuses 3.15 A 250 V, 10 pieces

OX.3010 Aluminum transport case with flight case locks

OX.3011 Aluminum transport case with classical locks

DISPOSABLES

PB.5155 Microscope slides 76 x 26 mm, ground edges, 50 pieces

PB.5165 Cover glasses 18 x 18 mm, thickness 0.13-0.17 mm, 100 pieces

PB.5168 Cover glasses 22 x 22 mm, thickness 0.13-0.17 mm, 100 pieces

PB.5245 Lens cleaning paper, 100 sheets per pack

PB.5255 Immersion oil, n = 1.515 (25 ml)

PB.5274 Isopropyl alcohol 99% (200 ml)

PB.5275 Cleaning kit: lens cleaning fluid, lint free lens tissue, brush, air blower, cotton swabs

PB.5276 Microscope maintenance and servicing kit, 16pcs: cleaning brush, 6 pcs screwdriver set, air blower, 3 pcs Allen key, 1.5, 2, 2.5 mm, lens cleaning fluid 20 ml, cleaning cloth 140 x 140 mm, 100 pcs lens tissue sheets, tube of maintenance grease, 10 ml bottle of oil, packed in a nice toolbox

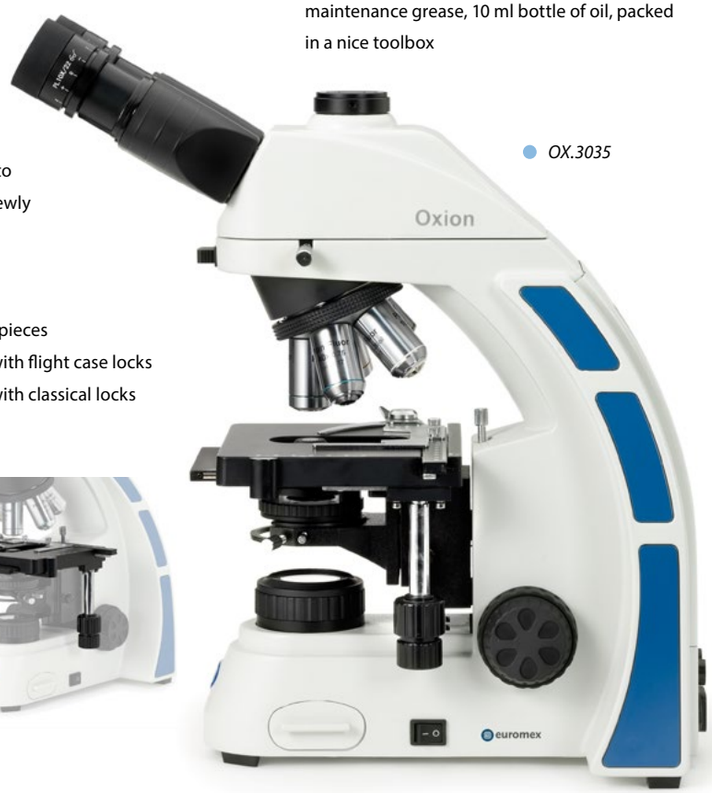

OX.3035

AE.5168-O heating stage

about
field of view

Field of view (FOV) is the visible area when looking through the microscope eyepiece (eyepiece FOV) or camera (camera FOV) and is usually expressed as a diameter

CALCULATING FOV OF AN EYEPIECE

The FOV through an eyepiece is equal to:

$$FOV = \frac{\textit{Field Number}}{\textit{Object Magnification}}$$

Field number (FN) is usually engraved on the eyepiece as a figure next to the magnification and expressed in mm, e.g. WF 10x/18. A 10x/18 eyepiece with a 40x objective will have a FOV = 18 mm / 40 = 0.45 mm or 450 nm

450 nm FOV with 10x/18 eyepiece and S40x objective

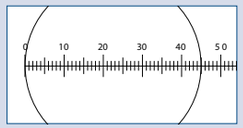

Micrometer stage 1 mm/100

900 nm FOV with 10x/18 eyepiece and S20x objective

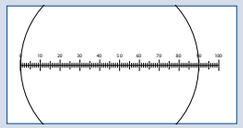

Micrometer stage 1 mm/100

FIELD OF VIEW WITH CAMERA

Most commercially available microscope digital cameras use 1/3, 1/2- or 2/3-inch rectangular sensors. A few will use a 1 inch camera sensor

As a consequence, a rectangular camera sensor cannot capture the circular FOV that exits from a eyepiece, microscope third tube or photo port

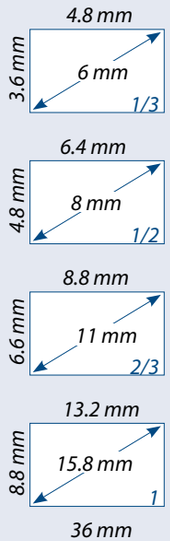

EYEPIECE VERSUS CAMERA FOV

Circular FOV through a WF10x/18 eyepiece

1/2 camera sensor and its rectangular FOV

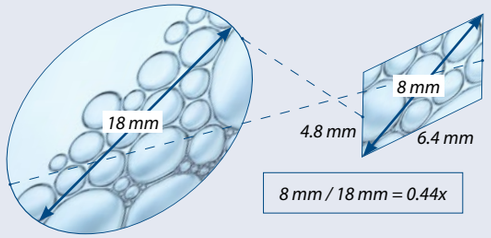

Furthermore, the circular eyepiece FOV is much larger than the camera FOV and thus the microscope FOV must be reduced" with a so-called relay" lens or photo-adapter" to fit the camera FOV. However - in order to avoid vignetting (dark shadows in the corners of an image), the circular microscope FOV must just be projected outside the image sensor area. Subsequently the camera FOV will always be smaller than the microscope FOV by 50 to 60%

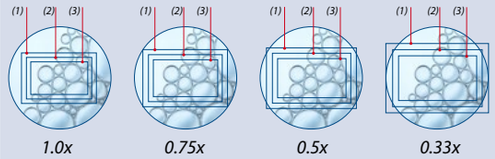

(1) = 2/3", (2) = 1/2" and (3) = 1/3"

Figure: different camera sensor sizes (2/3, 1/2, 1/3 inch) with different demagnifying" lenses (C-mount photo-adapters) 0.33x, 0.50x, 0,75x and 1.0x

IN ORDER TO OBTAIN THE DESIRED FIELD OF VIEW WITHOUT VIGNETTING USE:

a 0.33 x photo adapter for cameras with a 1/3 sensor

a 0.50 x photo adapter for cameras with a 1/2 sensor

a 0.75 photo adapters for cameras with a 2/3 sensor

a 1.0x or 1.2x photo adapters for cameras with a 1" or larger camera sensor

LIFE SCIENCE MICROSCOPES

BlueLine DUTCH QUALITY

NeoLED™ euromex optical technology

BioBlue.Lab

The BlueLine flagship BioBlue.Lab is the ideal laboratory instrument. The steady base and infinity corrected objectives make the BioBLue.Lab a high quality all-round microscope

All models are equipped with NeoLED™ illumination system for high resolution images and are available in binocular and trinocular versions

BB.1153-PLi

product information

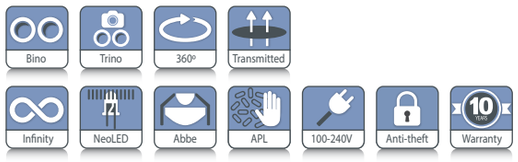

BB.1152-PLi
378 (h) x 190 (w) x 260 mm (d) | 5.4 kg
BB.1153-PLi
448 (h) x 190 (w) x 260 mm (d) | 5.6 kg

HIGHLIGHTS

- **WF 10x/20 mm eyepieces**
- **Binocular and trinocular models**
- **Reversed quadruple nosepiece**
- **Plan and plan phase objectives**
- **Non-infinity and infinity optical system**
- **Integrated rackless mechanical stage**
- **3 W NeoLED™ illumination**
- **Ergonomic carrying grip**
- **10 Years warranty**

BB.1153-PLPHi

SPECIFICATIONS

These ergonomic easy-to-use microscopes have been designed specifically for laboratory and university applications. The 150 x 140 mm mechanical stage has an integrated rackless X-Y stage with 75 x 30 mm travel range

An important feature of the BioBlue.Lab is the rackless stage, which provides a smooth translation of the specimen and highly precise positioning. This plays an integral part in most demanding cytology and histopathology applications

The BioBlue.Lab microscope models offer great functionality and are equipped with WF 10x/20 mm eyepieces, plan and IOS plan 4x/ 10x/ S40x/ S100x infinity corrected objectives

This enhancement is suitable for a wide variety of routine applications in laboratories and field microscopy

BioBlue BioBlue.Lab

EYEPIECES

Wide field WF 10x/20 mm eyepieces

HEAD

Binocular and trinocular models have 30° inclined Ø 30 mm tubes. The interpupillary distance is adjustable between 48 to 75 mm. All models have a ±5 diopter adjustment on left tube. All heads are 360° rotatable and secured with a screw

NOSEPIECE

Reversed quadruple nosepiece on ball bearings.
Slot for analyzer (BB.9602)

OBJECTIVES - 45 MM PARFOCAL

BioBlue.Lab microscopes are equipped with plan and plan IOS (infinity corrected) objectives. Optional 20x/0.40 and S60x/0.85 objectives are also available. The S40x, S60x and S100x objectives are spring loaded

All optics are anti-fungus treated and anti-reflection coated for maximum light throughput

AE.9919
Nylon bag

BB.9900
Aluminum case

FOCUSING

Coaxial coarse and fine adjustments with 200 graduations. Precision 1.5 µm per graduation, 0.3 mm per rotation. Total travel range is approximately 28 mm. Supplied with an adjustable rack stop to prevent damage to sample and objectives. The coarse adjustments are equipped with friction control

STAGE

Rackless 150 x 140 mm stage with mechanical 75 x 30 mm X-Y translation stage

CONDENSER

Height adjustable Abbe condenser N.A. 1.25 with iris diaphragm and filter holder. Supplied with white filter

ILLUMINATION

Binocular and trinocular models are supplied with an adjustable 3 W NeoLED™ illumination system for increased light output. Integrated 100-240V power supply

ANTI-THEFT SLOT

At the back of the microscope a Kensington Security slot is placed, which can be used to secure the instrument from theft

PACKAGE CONTENT

Supplied with power cord, dust cover, a spare fuse, user manual and 5 ml immersion oil and white filter. All packed in a polystyrene box

MODELS	Bino	Trino	4x/10x/S40x/S100x plan objectives	4x/10x/S40x/S100x plan IOS objectives	Rackless mechanical stage	Neo LED	Weight (kg)
BB.1152-PL	•		•		•	•	5.4
BB.1153-PL		•	•		•	•	5.5
BB.1152-PLi	•			•	•	•	5.4
BB.1153-PLi		•		•	•	•	5.5

ACCESSORIES AND SPARE PARTS

EYEPIECES

BB.6010 WF 10x/20 mm eyepiece, 30 mm tube
BB.6110 WF 10x/22 mm eyepiece, 30 mm tube with micrometer reticle
BB.6015 WF 15x/15 mm eyepiece, 30 mm tube
BB.6020 WF 20x/11 mm eyepiece, 30 mm tube
BB.6099 Pair of eyecups

OBJECTIVES - 45 MM PARFOCAL

BB.8804 Plan 4x/0.10 objective. WD 17.92 mm
BB.8810 Plan 10x/0.25 objective. WD 2.04 mm
BB.8820 Plan 20x/0.40 objective. WD 1.20 mm
BB.8840 Plan S40x/0.65 objective. WD 0.65 mm
BB.8860 Plan S60x/0.80 objective. WD 0.19 mm
BB.8800 Plan S100x/1.25 oil immersion objective. WD 0.18 mm
BB.7204 Plan 4x/0.10 IOS objective. WD 7.18 mm
BB.7210 Plan 10x/0.25 IOS objective. WD 4.80 mm
BB.7220 Plan 20x/0.40 IOS objective,. WD 5.27 mm
BB.7240 Plan S40x/0.65 IOS objective. WD 0.68 mm
BB.7260 Plan S60x/0.85 IOS objective. WD 0.50 mm
BB.7200 Plan S100x/1.25 oil immersion IOS objective. WD 0.20 mm
BB.7710 Plan phase 10x/0.25 IOS objective. WD 4.7 mm
BB.7720 Plan phase 20x/0.40 IOS objective. WD 1.75 mm
BB.7740 Plan phase S40x/0.65 IOS objective. WD 0.72 mm
BB.7700 Plan phase S100x/1.25 oil immersion IOS objective. WD 0.50 mm

WD = working distance

MISCELLANEOUS

BB.9602 Analyzer in slider, Ø 25 mm. Fits in nosepiece
BB.9707 White filter Ø 32 mm. Fits in filter holder
BB.9732 Polarization filter, 32 mm diameter. Fits in filter holder
BB.9880 Köhler attachment
BB.9993 3 W NeoLED™ replacement unit
AE.5227 Fuse 1 A 250 V, 10 pieces
BB.9900 Aluminum case
AE.9919 Nylon bag for BioBlue.Lab, 58(h) x 32(w) x 24(d)

CAMERA ACCESSORIES

AE.5130 Universal SLR camera adapter with 2x projection lens for 23.2 mm tubes. Needs T2 adapter
AE.5040 T2 adapter for Canon EOS SLR digital camera
AE.5025 T2 adapter for Nikon D SLR digital camera

DISPOSABLES

PB.5155 Microscope slides 76 x 26 mm, ground edges, 50 pieces
PB.5157-W Microscope slides 76 x 26 mm, ground edges. White frosted side, 50 pieces per pack
PB.5157-B Microscope slides 76 x 26 mm, ground edges. Blue frosted side, 50 pieces per pack
PB.5160 Microscope slides 76 x 26 mm with cavity, grinded edges. 10 pieces per pack
PB.5165 Cover glasses 18 x 18 mm, thickness 0.13-0.17 mm, 100 pieces
PB.5168 Cover glasses 22 x 22 mm, thickness 0.13-0.17 mm, 100 pieces
PB.5245 Lens cleaning paper, 100 sheets per pack
PB.5255 Immersion oil, n = 1.482 (25 ml)
PB.5274 Isopropyl alcohol 99% (200 ml)
PB.5275 Cleaning kit: lens cleaning fluid, lint free lens tissue, brush, air blower, cotton swabs
PB.5276 Microscope maintenance and servicing kit, 16pcs: cleaning brush, 6 pcs screwdriver set, air blower, 3 pcs Allen key, 1.5, 2, 2.5 mm, lens cleaning fluid 20 ml, cleaning cloth 140 x 140 mm, 100 pcs lens tissue sheets, tube of maintenance grease, 10 ml bottle of oil, packed in a nice toolbox

Delphi-X inverso

Delphi-X Inverso™

Delphi-X Inverso™ is an inverted microscope for the professional with demanding applications of living cell cultures and stained samples. It is available in two configurations:

- for phase contrast plus DIC (differential interference contrast) equipment
- for fluorescence application

Super contrast semi-apochromatic objectives with collar adjustment ring assure perfect observation of cells or tissues in 1.2 mm thick Petri dishes or flasks

DI.1053-PLPHi

product information

Trino | Transmitted | Incident | Infinity | DIC | LED | Phase | 100-240V | Warranty

PHASE CONTRAST DI.1053-PLPHFi
686.5 (h) x 276 (w) x 800 mm (d) | 31 kg

HIGHLIGHTS

- **Life science applications**
- **Observation of tissue cultures, living cells**
- **Brightfield, phase contrast**
- **DIC (differential interference contrast)**
- **Long working distance**
  IOS plan semi apochromatic objectives
- **Revolving sextuple nosepiece**
- **5 W LED or 100 W halogen transmitted illumination**
- **Backwards tilting condenser arm**
- **Easy placement of large objects**
- **10 Years warranty**

Phase contrast brightfield and differential interference contrast condenser

SPECIFICATIONS

EYEPIECES

Pair of HWF plan 10x/25 mm or 10x/22 mm eyepieces with diopter adjustment (optional)

HEAD

Trinocular 45° inclined tubes. Interpupillary distance of 47 to 78 mm. Trinocular head with 100-0, 80/20 and 0/100 positions

NOSEPIECE

Revolving sextuple nosepiece on ball-bearings. The nosepiece can be equipped with DIC prisms for the 10x, 20x, 40x and 60x objectives

OBJECTIVES

High numerical infinity semi-apochromatic long working distance plan phase Fluarex PLPHFi 10x/0.30, 20x/0.45, S40x/0.60 IOS objectives enable the sub-cellular structures. An optional 4x/0.13 and 60x/0.70 IOS objectives are also available. The 20x, 40x and optional 60 objectives are equipped with collar adjustment ring for glass thicknesses from 0 to 1.2 mm

Fluarex™ objectives are made of low-absorption glass.
Fluarex™ is a trademark of Euromex microscopen bv.
All optics are anti-fungus treated and anti-reflection coated for maximum light throughput

STAGE

Stage 340 x 230 mm, equipped with a coaxial mechanical 130 x 85 mm X-Y stage. Supplied with:

- Metal insert for Ø 38 mm cell culture dish
- Metal insert for Ø 54 mm cell culture dish or 76 x 26 mm slides
- Metal insert for Multiwell plates (127.76 x 85.48 mm)
- Metal insert for Teraski plates (83.3 x 58.0 mm)
- Optional universal cell culture holder

CONDENSER

Rotating N.A. 0.55 condenser with 6 positions, iris diaphragm and filter holders. Working distance is 26 mm. Supplied with phase contrast annuli for 10x/20x, 40x and 60x objectives, brightfield position and slots for optional DIC prisms. Three filter holders allow the insertion of Ø 38 mm filters in the optical path. The arm with condenser can be tilted backwards for convenient access to the stage. This allows easy placement of large objects like flasks and Petri dishes

MAGNIFICATION CHANGER

A magnification changer with a 1.5x lens allows intermediary magnifications of 1.5 times the standard objective magnifications. For example switching from 20x to 30x or from 60x to 90x magnification can be done without the need to change objectives

FLUORESCENCE FILTER SET WHEEL

The Delphi-X Inverso is supplied with a 6-position fluorescence filter set wheel. See photo below. (More information on fluorescence in the Delphi-X Inverso fluorescence)

FOCUSING ADJUSTMENT

Coaxial 10 mm coarse and fine adjustments, 1 µm precision and with friction adjustment

ILLUMINATION

Transmitted 5 W LED or 100 W halogen Intensity adjustable with internal 100-240 V power supply. Fuse holder 5 A / 250 V. Delphi-X Inverso can be extended with fluorescence equipment

PACKAGE CONTENT

Supplied with metal insert for Ø 38 mm cell culture dish and a metal insert for Ø 54 mm cell culture dish with 76 x 26 mm slides, metal insert for Multiwell plates, metal insert for Teraski plates, blue and green interference Ø 38 mm filters, power cord, dust cover, green filter and alignment telescope and user manual

ICSI SET

(Intracytoplasmic sperm injection)

- Perfect for inexperienced users in need of training practice as well as for professionals
- Complete manual system
- Large movement range
- Easy micropipette repositioning
- Adjustable micropipette holder angle between 20° and 40°
- Micropipette holder fixing knob reduces vibration and provides easy handling of the sperm
- Easy installation and service
- 3D Hydraulic manipulation joysticks for smooth movement
- Pneumatic Air Injector for ICSI and holding
- No service required for injector
- Identical sensitive injectors on both sides and interchangeable
- Top quality for affordable price
- Medical device CE mark
- Movement range: X/Y/Z: 20 mm each, 1 mm for one complete turn of the handle
- Optional heating stage with controller

Set includes two 3D hydraulic joysticks, two pipette setup mechanisms, one connection bar with moving handle, two air injectors with tubing and pen type micromanipulation, pipette holder, two metal plates for injectors, one set of Allen wrenches, one ruler for mechanic home position adjustment. Unit is packed in a solid carry case

Filters in sliders

HEATING STAGE AE.8010

Heating glass stage for Euromex microscope stage with 110 mm circular hole. The glass plate fits the circular opening of the X-Y stage and enables a flat glass object-plate with constant temperature. The stage has an aluminum frame for superior resistance and flatness. Glass thickness 0.5 mm. Plate diameter 110 mm

AE.8010 Controller

Controller AE.8010

- 2-Channel Temperature Controller with touchscreen interface
- One controller can control up to two devices
- On-board data logging allows for recording temperature as a function of time and logging calibration events and alarms
- The password protected controller is equipped with routines to re-calibrate the sensors against certified thermometers
- Temperature range: from ambient to 60°C
- Temperature accuracy on specimen: ± 0.3°C
- 4.3'' touch screen interface
- Alarm buzzer and external alarm connector
- Self calibration routines enable high temperature accuracy

DI.1053-PLPHFi with CMEX camera

MODELS	LWD Plan phase 10x/20x/S40x objectives	100 W Halogen illumination	5 W LED illumination
DI.1053-PLPHFi	•		•
DI.2053-PLPHFi	•	•	

ACCESSORIES AND SPARE PARTS

EYEPIECES

DI.6010 Super wide field SWF 10x/25 mm eyepiece

DI.6010-C Super wide field SWF 10x/25 mm eyepiece with crosshairs

DI.6010-M Super wide field SWF 10x/25 mm eyepiece with micrometer

DI.6010-CM Super wide field SWF 10x/25 mm eyepiece with micrometer and crosshairs

DI.6010-SG Super wide field SWF 10x/25 mm eyepiece with 20 x 20 square grid reticle

DI.6012 Wide field WF 12.5x/17.5 mm eyepiece

DI.6015 Wide field WF 15x/16 mm eyepiece

DI.6020 Wide field WF 20x/12 mm eyepiece

DI.6210 Super wide field SWF 10x/22 mm eyepiece

DI.6099-L Eyecup for eyepiece

OBJECTIVES

DI.8604 Infinity Plan Semi-Apochromatic Fluarex PLPFi-Apo 4x/0.13 IOS objective, working distance 17 mm. Recommended for fluorescence. M25 mounting thread

DI.8610 Infinity Plan Semi-Apochromatic Fluarex PLPFi-Apo 10x/0.30 IOS objective, working distance 7.4 mm. Cover glass correction 1.2 mm. Recommended for DIC and fluorescence. M25 mounting thread

DI.8620 Infinity Plan Semi-Apochromatic Fluarex PLPFi-Apo 20x/0.45 IOS objective, working distance 8 mm. Cover glass correction 1.2 mm. Recommended for DIC and fluorescence. M25 mounting thread

DI.8640 Infinity Plan Semi-Apochromatic Fluarex PLPFi-Apo 40x/0.60 IOS objective, working distance 3.3 mm. Cover glass correction 1.2 mm. Recommended for DIC and fluorescence. M25 mounting thread

DI.8660 Infinity Plan Semi-Apochromatic Fluarex PLPFi-Apo 60x/0.70 IOS objective, with collar ring for adjustment of working distance 01 - 1.3 mm. Recommended for fluorescence. M25 mounting thread

DI.8704 Infinity semi-apochromatic long working distance plan phase Fluarex PLPHFi 4x/0.13, IOS objective. WD 16.8 mm

DI.8710 Infinity semi-apochromatic long working distance plan phase Fluarex PLPHFi 10x/0.30, IOS objective PLPHi 10x/0.30 objective. WD 10.2 mm

DI.8720 Infinity semi-apochromatic long working distance plan phase Fluarex PLPHFi 20x/0.45 objective. WD 7.5 to 8.8 mm

DI.8740 Infinity semi-apochromatic long working distance plan phase Fluarex PLPHFi S40x/0.60 IOS objective. WD 3 to 4.4 mm

WD = working distance

DIFFERENTIAL INTERFERENCE CONTRAST

DI.9690-00 DIC prism with polarizer for condenser. To be used with Plan Semi-Apo 20/40x objectives

DI.9690-10 DIC prism with polarizer for condenser. To be used with Plan Semi-Apo 10x objective

DI.9693-10 DIC prism for nosepiece to be used with Semi-Apo 10x objective

DI.9693-20 DIC prism for nosepiece to be used with Semi-Apo 20x objective

DI.9693-40 DIC prism for nosepiece to be used with Semi-Apo 40x objective

DI.9698 DIC analyzer for nosepiece

MICROMANIPULATOR ATTACHMENT

AE.8000 Micromanipulator for intracytoplasmic sperm injection (ICSI) suitable with the Oxion Inverso inverted microscope

AE.8010 Heating stage with transparent glass plate for AE.8000 Micromanipulator, including digital temperature controller

CAMERA ACCESSORIES

DI.9810 C-mount with 1x magnification for C-mount camera

DI.9840 C-mount with high resolution 0.40x objective for 1/3 inch C-mount camera

DI.9850 C-mount with high resolution relay 0.50x objective for 1/2 inch C-mount camera

MISCELLANEOUS

DI.9191 Phase contrast annuli for 4x PLPHFi objective DI.8704

DI.9961 100 Watt 12 V halogen bulb

DI.9997 5 Watt LED replacement

AE.5214 500 mA 250 V fuses for LED models, 10pcs

AE.5216 5 A 250 V fuses for Halogen models, 10pcs

DISPOSABLES

PB.5155 Microscope slides 76 x 26 mm, ground edges, 50 pieces per pack

PB.5157-W Microscope slides 76 x 26 mm, ground edges and frosted side white color, 50 pieces per pack

PB.5157-B Microscope slides 76 x 26 mm, ground edges and frosted side blue color, 50 pieces per pack

PB.5165 Cover glasses 18 x 18 mm, 0.13-0.17 mm, 100 pieces

PB.5168 Cover glasses 22 x 22 mm, 0.13-0.17 mm, 100 pieces

PB.5245 Lens cleaning paper, 100 sheets per pack

PB.5274 Isopropyl alcohol 99%, 200 ml

PB.5275 Cleaning kit: lens fluid, lint free lens tissue/paper, brush, air blower, cotton swabs

DIMENSIONS

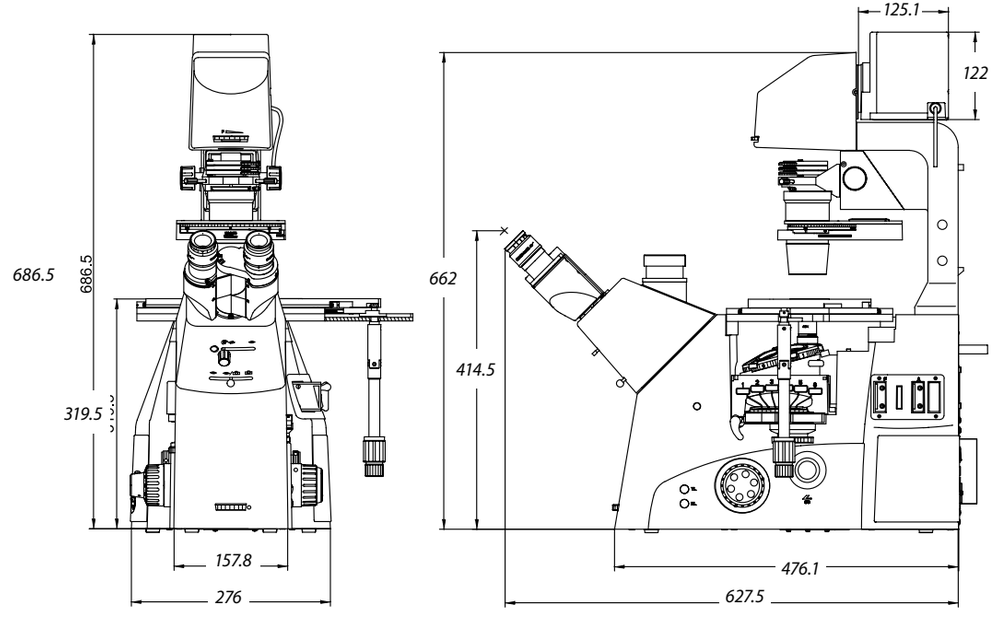

Oxion inverso

OX.2053-PLPH

Oxion Inverso

The Oxion Inverso inverted microscopes are useful for observation of living organisms and tissues cultures in cell culture dishes and flasks

The Oxion Inverso series is available in two configurations:

- for brightfield and phase contrast
- for fluorescence (see chapter on fluorescence)

Dedicated objectives are suitable for 1.2 mm thick glass bottoms of cell culture dishes and flasks

product information

Trino | Transmitted | Infinity | LED | Phase | 100-240V | Warranty

OX.2003-PL / OX.2053-PL
488 (h) x 231 (w) x 555 mm (d) | 12.0 kg

HIGHLIGHTS

- **Life science applications**
- **Observation of tissue cultures, living cells**
- **Brightfield and phase contrast**
- **Long working distance IOS plan achromatic objectives**
- **Revolving quintuple nosepiece**
- **5 W LED transmitted illumination**
- **10 Years warranty**

Micromanipulator for intracytoplasmic sperm injection (ICSI)

SPECIFICATIONS

EYEPIECES

Pair of HWF plan 10x/22 mm eyepieces

HEAD

Trinocular 45° inclined tubes with extended low and high positions for eyepieces. One diopter adjustment on left eyepiece. Interpupillary distance of 54 to 75 mm. Trinocular head with 100-0 % and 0-100 % positions

NOSEPIECE

Revolving quintuple nosepiece on ball-bearings

OBJECTIVES FOR BRIGHTFIELD

(models OX.2003-PL and OX.2053-PL)
Infinity color corrected long working distance plan 10x/0.25, 20x/0.40, 40x/0.60 IOS objectives. An optional 60x/0.70 IOS objective is also available

OBJECTIVES FOR PHASE CONTRAST

(models OX.2003-PLPH and OX.2053-PLPH)
Infinity color corrected long working distance plan phase 10x/0.25, 20x/0.40, 40x/0.60 IOS objectives

FLUAREX OBJECTIVES FOR BRIGHTFIELD

Infinity color corrected long working distance plan Fluarex 10x/0.30, 20x/0.45, 40x/0.65 IOS objectives. An optional plan Fluarex 60x/0.75 IOS objective is also available

FLUAREX OBJECTIVES FOR PHASE CONTRAST

Infinity color corrected long working distance plan Fluarex 10x/0.30 and plan phase Fluarex 20x/0.45 and S40x/0.65 IOS objectives

All objectives corrected for 1.2 mm thickness.
Fluarex™ objectives are made of low-absorption glass
Fluarex™ is a trademark of Euromex microscopen bv

All optics are anti-fungus treated and anti-reflection coated for maximum light throughput

STAGE

Stage 250 x 230 mm equipped with a coaxial mechanical 120 x 78 mm X-Y stage. Delivered with:

- Stage extension plate
- Metal insert for Ø 65 mm cell culture dish or Multiwell
- Metal insert for 76 x 26 mm slides and 54 mm cell dish (only for models with X-Y stage)
- Optional universal cell culture holder

CONDENSER

N.A. 0.30 condenser with iris diaphragm.
Working distance 72 mm
The models for the phase contrast OX.2003-PLPH, OX.2053-PLPH, OX.2253-PLPHF and OX.2453-PLPHF are supplied with a slider with 4x/10x and 20x/40x pre-centered phase rings

FOCUSING ADJUSTMENT

Coaxial 25 mm coarse and fine adjustments, 2 µm precision and with friction adjustment

ILLUMINATION

Transmitted 5 W LED Intensity adjustable with internal 100-240 V power supply. Fuse holder 3.15 A / 250 V
Oxion Inverso can be extended with fluorescence equipment

FILTERS FOR PHASE CONTRAST MODELS

Interference filter 550 nm green and blue filter, Ø 45 mm

PACKAGE CONTENT

Supplied with metal insert with Ø 25 mm hole, metal insert for Ø 35 mm cell culture dish, blue LBD and green 550 nm interference Ø 45 mm filter, power cord, dust cover and user manual. Phase contrast models are supplied with 4x/10x and 20x/40x phase contrast annuli in slider, green filter and alignment telescope

ICSI SET (AE.8000)

(Intracytoplasmic sperm injection)

- Perfect for inexperienced users in need of training practice as well as for professionals
- Complete manual system
- Large movement range
- Easy micropipette repositioning
- Adjustable micropipette holder angle between 20° and 40°
- Micropipette holder fixing knob reduces vibration and provides easy handling of the sperm
- Easy installation and service
- 3D Hydraulic manipulation joysticks for smooth movement
- Pneumatic air injector for ICSI and holding
- No service required for injector
- Identical sensitive injectors on both sides and interchangeable
- Top quality for affordable price
- Medical device CE mark
- Movement range: X/Y/Z: 20 mm each, 1 mm for one complete turn of the handle
- Optional heating stage with controller

Set includes two 3D hydraulic joysticks, two pipette setup mechanisms, one connection bar with moving handle, two air injectors with tubing and pen type micromanipulation, pipette holder, two metal plates for injectors, one set of Allen wrenches, one ruler for mechanic home position adjustment

MODELS	LWD Plan 10x/20x/40x objectives	LWD Plan phase 10x/20x/40x objectives	Mechanical stage	ICSI equipment
OX.2003-PL	•			
OX.2053-PL	•		•	
OX.2003-PLPH		•		
OX.2053-PLPH		•	•	
OX.2053-PLPH-ICSI		•	•	•

LWD = long working distance

HEATING STAGE AE.8010

Heating glass stage for Euromex microscope stage with 110 mm circular hole. The glass plate fits the circular opening of the X-Y stage and enables a flat glass object-plate with constant temperature. The stage has an aluminum frame for superior resistance and flatness. Glass thickness 0.5 mm. Plate diameter 110 mm

Controller AE.8010

- 2-Channel Temperature Controller with touchscreen interface
- One controller can control up to two devices
- External temperature sensor (included) and self calibration routines allow easy calibration of the heating devices
- On-board data logging allows for recording temperature as a function of time and logging calibration events and alarms
- The password protected controller is equipped with routines to re-calibrate the sensors against certified thermometers
- Temperature range: from ambient to 60°C

Controller of the AE.8010

- Temperature accuracy on specimen: ± 0.3°C
- 4.3'' touch screen interface
- External temperature sensor
- On-board data logging to USB drive
- Alarm buzzer and external alarm connector
- One controller can control up to two devices
- Self calibration routines enable high temperature accuracy

OX.2053-PLPH-ICSI
Oxion Inverso with ICSI equipment
(intra-cytoplasmic sperm injection)

ACCESSORIES AND SPARE PARTS

EYEPIECES

OX.6010 HWF 10x/22 mm eyepiece
OX.6015 HWF 15x/16 mm eyepiece
OX.6110 HWF 10x/22 mm eyepiece with micrometer reticule
OX.6099 Pair of eyecups

PLAN OBJECTIVES FOR BRIGHTFIELD[1]

OX.8304 PL LWD 4x/0.13 IOS objective, WD 11 mm
OX.8310 PL LWD 10x/0.25 IOS objective, WD 7.45 mm
OX.8320 PL LWD 20x/0.40 IOS objective, WD 6.92 mm
OX.8340 PL LWD 40x/0.65 IOS objective, WD 2.74 mm
OX.8360 PL LWD 60x/0.70 IOS objective, WD 1.28 mm

PLAN FLUAREX OBJECTIVES FOR BRIGHTFIELD AND FLUORESCENCE[1]

OX.8604 PL FL LWD 4x/0.13 IOS objective, WD 18.95 mm
OX.8610 PL FL LWD 10x/0.30 IOS objective, WD 7.27 mm
OX.8620 PL FL LWD 20x/0.45 IOS objective, WD 6.03 mm
OX.8640 PL FL LWD 40x/0.65 IOS objective, WD 1.79 mm
OX.8660 PL FL LWD 60x/0.75 IOS objective, WD 1.28 mm

PLAN PHASE CONTRAST OBJECTIVES[1] [2]

OX.8404 PLPH LWD 4x/0.13 IOS objective, WD 10.75 mm
OX.8410 PLPH LWD 10x/0.25 IOS objective, WD 7.45 mm
OX.8420 PLPH LWD 20x/0.40 IOS objective, WD 6.92 mm
OX.8440 PLPH LWD 40x/0.65 IOS objective, WD 2.74 mm

OBJECTIVES FOR FLUORESCENCE AND PHASE CONTRAST [1] [2] [3]

OX.8720 Plan Phase Fluarex LWD 20x/0.45 infinity corrected IOS objective. WD 6.12 mm
OX.8740 Plan Phase Fluarex LWD 40x/0.65 infinity corrected IOS objective. WD 1.79 mm

PHASE CONTRAST ATTACHMENTS

OX.9148 Telescope for phase contrast fluorescence alignment
OX.9149 Telescope for phase contrast alignment
OX.9190 Slider with 4x/10x and 20x/40x phase contrast annuli

CAMERA ACCESSORIES

OX.9810 CS/C mount with 1.0x objective
OX.9833 C-mount adapter with 0.33x objective for Oxion microscopes and 1/3" cameras
OX.9850 C-mount adapter with 0.5x objective for Oxion and Oxion Inverso microscopes and 1/2" cameras
AE.5120-2 Trinocular 23.2 mm tube for Oxion photo port revision-2
AE.5130 Universal SLR camera adapter with 2x projection lens for 23.2 mm tubes
Needs T2 adapter and AE.5120 or AE.5120-2
AE.5025 T2 adapter for Nikon D digital SLR cameras
AE.5040 T2 adapter for Canon EOS digital SLR cameras

STAGES AND HOLDERS

OX.9500 Mechanical coaxial X-Y 120 x 78 mm stage
OX.9506 Transparent glass insert with Ø 30 mm hole
OX.9508 Metal insert with Ø 25 mm hole
OX.9510 Metallic insert for Ø 65 mm cell culture dish and Multiwell
OX.9512 Metal insert with 76 x 26 mm slide holder and Ø 55 mm cell culture dish holder
OX.9535 Metal insert for Ø 35 mm cell culture dish holder
OX.9550 Stage extension plate
OX.9599 Universal cell culture dish holder

[1] All objectives corrected for 1 mm cover glass thickness except OX.8304
[2] Phase contrast objectives require slider with phase contrast annuli OX.9163
[3] Phase contrast objectives require slider with phase contrast annuli OX.9163
All optical parts are anti-fungus treated
WD = working distance

OX.9599

MICROMANIPULATOR ATTACHMENT

AE.8000 Micromanipulator for intracytoplasmic sperm injection (ICSI) suitable with the Oxion Inverso inverted microscope
AE.8010 Heating stage with transparent glass plate for AE.8000 Micromanipulator, including advanced digital temperature controller

MISCELLANEOUS

OX.9700 Blue filter Ø 45 mm
OX.9985 5 W NeoLED™ replacement unit
AE.3199 Glass fuses 3.15 A 250 V packed, per 10 pieces

DISPOSABLES

PB.5155 Microscope slides 76 x 26 mm, ground edges, 50 pieces
PB.5165 Cover glasses 18 x 18 mm, thickness 0.13 - 0.17 mm, 100 pieces
PB.5168 Cover glasses 22 x 22 mm, thickness 0.13 - 0.17 mm, 100 pieces
PB.5245 Lens cleaning paper, 100 sheets per pack
PB.5255 Immersion oil, n = 1.515 (25 ml)
PB.5274 Isopropyl alcohol 99% (200 ml)
PB.5275 Cleaning kit: lens cleaning fluid, lint free lens tissue, brush, air blower, cotton swabs

DIMENSIONS

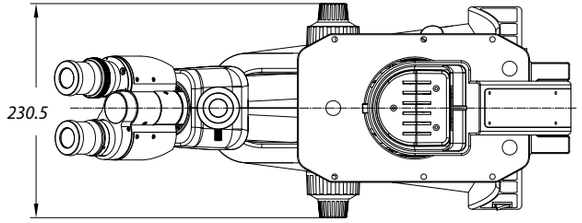

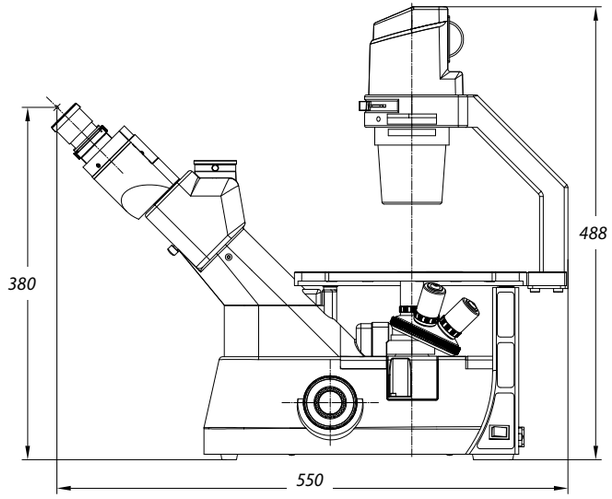

Accessories supplied with phase contrast models

fluorescence microscopes

Euromex offers a wide range of life science upright and inverted microscopes for researchers and biologists worldwide

On the next pages you will find all models that can be used in life science fluorescence applications, using mercury vapor lamps or LED technology together with optimized fluorescence filter sets

life science

fluorescence microscopes

product information

ISCOPE FLUORESCENCE • PAGE 162
BSCOPE FLUORESCENCE • PAGE 168
DELPHI-X OBSERVER FLUORESCENCE • PAGE 174
OXION FLUORESCENCE • PAGE 180
DELPHI-X INVERSO FLUORESCENCE • PAGE 186
OXION INVERSO FLUORESCENCE • PAGE 192
EUROMEX LED SOURCES • PAGE 198
FLUORESCENCE FILTER SETS • PAGE 200

iscope®

NeoLED™ euromex optical technology

IS.3152 PLi-3

iScope®
fluorescence

The excellent optics and mechanical components make the iScope® a state-of-the art microscope that is amongst others suitable for fluorescence applications in life science and biotechnological fields

The iScope® fluorescence microscope can be supplied with:

- 6-position rotating attachment with 100 W mercury vapor light source
- 3-position slider attachment with 100 W mercury vapor light source

product information

Bino | Trino | 360° | Transmitted | Incident | Köhler | Infinity

NeoLED | FluoLED | HG-HBO | Phase | Abbe | APL | 100-240V | Medical | Warranty

IS.3153-XXX
407 (h) x 210 (w) x 255 mm (d) | 11.3 kg

HIGHLIGHTS

- **HWF 10x/22 mm eyepieces**
- **Binocular and trinocular models**
- **Optional ergonomic tilting head**
- **Quintuple revolving nosepiece**
- **E-Plan, plan and plan Fluarex corrected IOS objectives**
- **187/230 x 140 mm rackless stage with integrated X-Y stage**
- **Optional ceramic stage**
- **Height adjustable Abbe condenser N.A. 1.25**
- **Coarse and fine adjustment**
- **Diascopic intensity adjustable 3 W NeoLED™ Köhler illumination**
- **Epi-fluorescence 100 W HBO mercury vapor**
- **iCare sensor for energy saving**
- **CSS - Cable Storage System**
- **10 Years warranty**

IS.3153-PLFi/6

SPECIFICATIONS

EYEPIECES

Extended plan EWF 10x/22 mm eyepieces, Ø 30 mm tubes. Eyepieces can be secured to the tubes. The trinocular head of the plan infinity corrected models (IS.1153-PLi) has a light path selector (100:0 / 50:50) and ± 5 diopter adjustments on both Ø 30 mm tubes. The trinocular head of the E-plan infinity corrected models (IS.1153-EPLi) has a fixed built-in light path beam splitter (50:50) and one ± 5 diopter adjustment on the Ø 30 mm left tube

HEAD

Binocular and trinocular Siedentopf type heads are equipped with 30° inclined tubes, interpupillary distance from 48 to 76 mm and diopter adjustment(s). A unique rotating system allows the ergonomic positioning of both tubes in a high (431 mm) and in a low position (397 mm). The trinocular head comes with a Ø 23.2 mm photo port. An optional ergonomic tilting head and corresponding Ø 23.2 mm photo tube attachment are also available (only infinity corrected models) To order an iScope® with tilting head use reference IS.3158-xxx

NOSEPIECE

Revolving and reversed nosepiece for a maximum of five objectives

OBJECTIVES

See table below

STAGE

- 187/230 x 140 mm rackless stage equipped with double slide holder and integrated 79 x 52 mm mechanical stage. The iScope® rackless stage has no protruding parts, enabling more smooth movements and is safer
- 220 x 157 mm ceramic stage with integrated 75 x 50 mm mechanical stage with a very tough ceramic surface, protects against marks and scratches. The surface also ensures stray light not to be reflected from the stage into the objective

OBJECTIVES

E-Plan EPLi IOS	4x/0.10	10x/0.25		S40x/0.65		S100x/1.25 oil
Plan PLi IOS	4x/0.10	10x/0.25	20x/0.40*	S40x/0.65	S60x/0.85*	S100x/1.25 oil
Plan PLFi IOS	4x/0.13	10x/0.30	20x/0.50*	S40x/0.75		S100x/1.30 oil

** optional: the plan Fluarex PLFi ™ objectives are suitable for violet and ultra violet excitation*
All optics are anti-fungus treated and anti-reflection coated for maximum light throughput

CONDENSER FOR BRIGHTFIELD

The standard height adjustable Abbe N.A. 1.25 condenser for brightfield accepts sliders with phase annuli suitable for plan phase 10x/20x or S40x/S100x oil immersion IOS objectives for economical phase contrast. With magnification indication. A slider with a simple dark stop for darkfield up to 400x magnification is also available

CONDENSER FOR ZERNIKE PHASE CONTRAST

An optional height adjustable Zernike NA. 1.25 phase contrast disc condenser with plan phase 10/20/S40x and S100x oil immersion objectives and darkfield stop position for darkfield contrast observation up to 400x magnification

FOCUSING

Coaxial coarse and fine adjustments, 200 graduations, 1 µm per graduation, 200 µm per rotation, total travel range is approximately 24 mm. Supplied with an adjustable rack stop to prevent damage to sample and objectives. The coarse adjustments are equipped with friction control

ILLUMINATION

3 W adjustable Köhler NeoLED™ diascopic illumination with internal 100-240 V power supply

The innovative NeoLED™ design offers larger apertures, allowing the optical system of the iScope® microscope to produce images at higher resolutions, very close to the theoretical diffraction limit of the optics. Other benefits of the NeoLED™ is the low energy consumption, no heating and a long operating life span

The Köhler illumination on models with IOS plan and plan phase infinity corrected systems provides high contrast and a maximum achievable resolving power of the optics. Also available for other models as an option

ILLUMINATION FOR FLUORESCENCE

The 6-position rotating or 3-position slider fluorescence attachments are supplied with standard 100 W HBO mercury vapor light source for a broad powerful light spectrum and 100-240 V external power supply with indication of the life span of 100 W HBO lamp

Supplied with standard fluorescence filter sets for blue excitation (EX460-490 (BP) DM500 EM520 (LP)) and green excitation (EX510-550 (BP) DM570 EM590 (LP)) and a UV protection shield. Optional standard fluorescence filters for UV excitation (EX330-385 (BP) DM400 EM420 (LP)) and violet excitation (EX400-410 (BP) DM455 EM455 (LP))

The iScope® fluorescence microscopes can also be supplied with optimized and zero-pixel shift optimized filter sets on request. See end of this chapter

ICARE SENSOR

The unique iCare Sensor is developed to avoid unnecessary loss of energy. The illumination of the microscope automatically switches off shortly after microscopists step away from their position

CSS–CABLE STORAGE SYSTEM

iScope® allows users to easily insert the power cable into the back of the instrument, which enables easy storage

The integrated carrying grip at the back of the microscope ensures safe transportation of the microscope

PACKAGE CONTENT

Supplied with power cord, dust cover, a spare fuse, user manual and 5 ml immersion oil for models with S100x objective. Models with 100 W mercury vapor light source have a UV protection shield. All packed in polystyrene boxes

6-POSITION ROTATING ATTACHMENT

With 100 W mercury vapor light source. The 6-position rotating fluorescence attachments are supplied with a standard 100 W HBO mercury vapor light source for a broad powerful light spectrum. Supplied with standard fluorescence filter sets for excitation in the blue and green light spectrum and a UV protection shield

MODELS	Trino	WF 10x/22 mm	Diopter adjustable on left side	Diopter adjustable on both sides	E-plan EPLi 4x/10x/S40x and S100x objectives	Plan PLi 4x/10x/S40x and S100x objectives	Plan PLF 4x/10x/S40 and S100x objectives	100 W HBO light source	Filter sets (blue & green)	NeoLED™ illumination
IS.3153-EPLi/6	•	•	•		•			•	•	•
IS.3153-PLi/6	•	•		•		•		•	•	•
IS.3153-PLFi/6	•	•		•			•	•	•	•

3-POSITION SLIDER ATTACHMENT

With 100 W mercury vapor light source. The 3-position slider fluorescence attachments are supplied with standard 100 W HBO mercury vapor light source for a broad powerful light spectrum. Supplied with standard fluorescence filter sets for blue and green excitation and a UV protection shield

MODELS	Trino	WF 10x/22 mm	Diopter adjustable on both sides	Plan PLi 4x/10x/ S40x and S100x objectives	Plan PLF 4x/10x/ S40x and S100x objectives	100 W HBO light source	Filter sets (blue & green)	NeoLED™ illumination
IS.3153-PLi/3	•	•	•	•		•	•	•
IS.3153-PLFi/3	•	•	•		•	•	•	•

ACCESSORIES AND SPARE PARTS

EYEPIECES

IS.6210 EWF 10x/22 mm eyepiece (Ø 30mm tube)
IS.6210-C EWF 10x/22 mm eyepiece with crosshairs (Ø 30 mm tube)
IS.6210-P EWF 10x/22 mm eyepiece with pointer (Ø 30 mm tube)
IS.6210-CM EWF 10x/22 mm eyepiece with 10/100 micrometer and crosshairs (Ø 30 mm tube)
IS.6212 WF 12.5x/17 mm eyepiece (Ø 30 mm tube)
IS.6215 WF 15x/16 mm eyepiece (Ø 30 mm tube)
IS.6220 WF 20x/12 mm eyepiece (Ø 30 mm tube)
IS.6299 Pair of eyecups infinity models

OBJECTIVES

IS.7104 E-plan EPL 4x/0.10 objective. WD 15.2 mm
IS.7110 E-plan EPL 10x/0.25 objective. WD 5.5 mm
IS.7120 E-plan EPL 20x/0.40 objective. WD 3.5 mm
IS.7140 E-plan EPL S40x/0.65 objective. WD 0.45 mm
IS.7160 E-plan EPL S60x/0.85 objective. WD 0.19 mm
IS.7100 E-plan EPL S100x/1.25 objective. WD 0.13 mm
IS.7710 Plan PLPH 10x/0.25 phase contrast objective. WD 12.2 mm
IS.7720 Plan PLPH 20x/0.40 phase contrast objective. WD 5 mm
IS.7740 Plan PLPH S40x/0.65 phase contrast objective. WD 0.37 mm
IS.7700 Plan PLPH S100x/1.25 phase contrast objective. WD 0.13 mm
IS.8804 E-plan EPLi 4x/0.10 IOS objective. WD 15.4 mm
IS.8810 E-plan EPLi 10x/0.25 IOS objective. WD 5.8 mm
IS.8840 E-plan EPLi S40x/0.65 IOS objective. WD 0.43 mm
IS.8800 E-plan EPLi S100x/1.25 IOS objective. WD 0.13 mm
IS.7202 Plan PLi 2x/0.05 IOS objective, WD 18.3 mm. Best used together with swing-out condenser
IS.7204 Plan PLi 4x/0.10 IOS objective. WD 15.4 mm
IS.7210 Plan PLi 10x/0.25 IOS objective. WD 10 mm
IS.7220 Plan PLi 20x/0.40 IOS objective. WD 5.1 mm

IS.7240 Plan PLi S40x/0.65 IOS objective. WD 0.54 mm
IS.7260 Plan PLi S60x/0.85 IOS objective. WD 0.14 mm
IS.7200 Plan PLi S100x/1.25 IOS objective. WD 0.13 mm
IS.7200-I Plan super contrast PLi S100x/1.25 IOS objective with built-in iris diaphragm. WD 0.13 mm
IS.7404 Plan Fluarex PLFi 4x/0.10 IOS objective. WD 21.6 mm
IS.7410 Plan Fluarex PLFi 10x/0.30 IOS objective. WD 2.9 mm
IS.7420 Plan Fluarex PLFi 20x/0.50 IOS objective. WD 1.5 mm
IS.7440 Plan Fluarex PLFi S40x/0.75 IOS objective. WD 0.6 mm
IS.7400 Plan Fluarex PLFi S100x/1.30 IOS objective. WD 0.13 mm
IS.8910 Plan PLPHi 10x/0.25 phase contrast IOS infinity corrected objective. WD 10.2 mm
IS.8920 Plan PLPHi 20x/0.40 phase contrast IOS infinity corrected objective. WD 5.1 mm
IS.8940 Plan PLPHi S40x/0.65 phase contrast IOS infinity corrected objective. WD 0.5 mm
IS.8900 Plan PLPHi S100x/1.25 phase contrast IOS infinity corrected objective. WD 0. 13 mm

WD = working distance

CONDENSERS

IS.9102 Standard Abbe condenser 1.25 NA condenser with slot for darkfield and phase contrast sliders
IS.9105 Swing-out 0.9/1.25 NA condenser

PHASE CONTRAST ATTACHMENTS

IS.9124 Zernike phase contrast set PLPH 10/20/40/100 brightfield and darkfield position
IS.9127 Zernike phase contrast set PLPHi 10/20/40/100 IOS brightfield and darkfield position
IS.9148 Telescope for phase contrast Ø30 mm tube
IS.9149 Telescope for phase contrast Ø 23.2 mm tube
IS.9160 Phase contrast slider set with 10x and S40x PLPH objectives and annuli for 10/S40x PLPH objectives. Also suitable for optional 20x PLPH objective
IS.9161 Phase contrast slider set with 20x and S100x PLPH objectives and annuli for 20x/S100x PLPH objectives
IS.9162 Phase contrast slider set with 10x and S40x PLPHi IOS infinity corrected objectives and annuli for 10x/S40x PLPHi IOS infinity corrected objectives. Also suitable for optional 20x PLPHi infinity corrected objective
IS.9163 Phase contrast slider set with 20x and S100x PLPHi IOS infinity corrected objectives and annuli for 20x/S100x PLPHi IOS infinity corrected objectives
IS.9190 Slider with phase contrast annuli for 10x and S40 phase contrast non-IOS objective (without objective, condenser and without alignment telescope)
IS.9192 Slider with phase contrast annuli for 20x and S100 phase contrast non-IOS objective (without objective, condenser and without alignment telescope)
IS.9194 Slider with phase contrast annuli for S40 phase contrast objective
IS.9196 Slider with phase contrast annuli for 10x and S40 phase contrast IOS objective (without objective, condenser and without alignment telescope)
IS.9198 Slider with phase contrast annuli for 20x and S100 phase contrast IOS objective (without objective, condenser and without alignment telescope)

POLARIZATION ATTACHMENTS

IS.9600 Polarization filter 45 mm for lamphouse
IS.9601 Polarization set: simple rotating polarizer for lamphouse and fixed polarizer mounted under head
IS.9626 Polarization filter for mounting under the head

FILTERS

IS.9700 Blue filter 45 mm for lamphouse
IS.9702 Green filter 45 mm for lamphouse
IS.9704 Yellow filter 45 mm for lamphouse
IS.9706 White opaque filter 45 mm for lamphouse
IS.9752.ND25 Neutral density 25 % transmission filter ND25 for 6-positions Fluorescence attachment

MISCELLANEOUS

IS.9170 Slider with darkfield stop
IS.9501-ADD Stage with ergonomical low-positionned X-Y adjustments of mechanical stage. Right handed. Add-on price, only with new microscopes
IS.9503 Large ceramic stage. Only with new microscopes, add /C suffix after iScope® model part number
IS.9880 Köhler attachment
IS.9749-6 Empty filter cube for 6-position fluorescence attachment
IS.9749-3 Empty filter cube for 3-position fluorescence attachment
IS.9753 Filter rail, 3-position
AE.3684 Glass fuses 500 mA 250 V, 10 pieces
AE.5168-I Heating stage series with controller, only with new microscopes
SL.1385 100 W HBO mercury vapor lamp for fluorescence
SL.5500 NeoLED™ replacement unit

CAMERA ACCESSORIES

IS.9800 single photo tube attachment with one Ø 23.2 mm tube for IS.5700 ergonomic tilting head of iScope® infinity systems
AE.5130 Universal SLR adapter with built-in 2x lens for standard 23.2 mm tube. Needs T2 adapter
AE.5025 T2 adapter for Nikon D SLR digital camera
AE.5040 T2 adapter for Canon EOS SLR digital camera

DISPOSABLES

PB.5155 Microscope slides 76 x 26 mm, ground edges, 50 pieces per pack
PB.5165 Cover glasses 18 x 18 mm, 0.13-0.17 mm, 100 pieces
PB.5168 Cover glasses 22 x 22 mm, 0.13-0.17 mm, 100 pieces
PB.5245 Lens cleaning paper, 100 sheets per pack
PB.5255 Immersion oil, 25 ml. Refraction index n = 1.515
PB.5274 Isopropyl alcohol 99%, 200 ml
PB.5275 Cleaning kit: lens fluid, lint free lens tissue/paper, brush, air blower, cotton swabs

DIMENSIONS

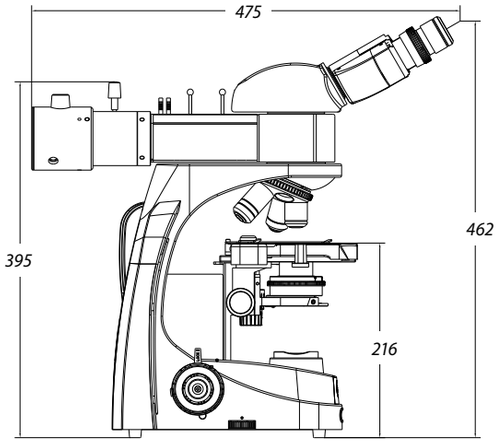

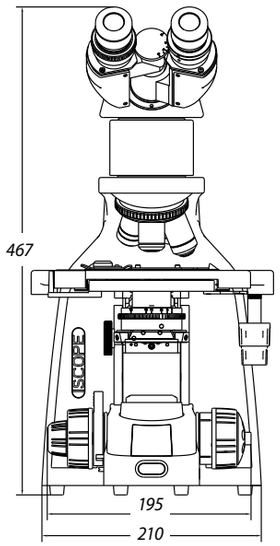

bscope®

NeoLED™

bScope®
fluorescence

The bScope® microscope for fluorescence microscopy is equipped with four monochromatic LEDs

The microscopes are supplied with fluorescence filter sets and dichroic mirrors for excitation in the blue, green, violet and ultraviolet spectral regions

BS.3153-PLi

product information

Bino | Trino | 360° | Incident | Transmitted | Köhler | Infinity

NeoLED | Phase | Abbe | APL | Battery | 100-240V | Medical | Anti-theft | Warranty

BS.3153-PL(F)i
505 (h) x 195 (w) x 450 mm (d) | 8.8 kg

HIGHLIGHTS

- **Trinocular models**
- **WF 10x/22 mm eyepieces, 30 mm tubes**
- **Reversed ball-bearing quintuple nosepiece with slot for polarization filter**
- **Plan IOS and plan Fluarex IOS objectives**
- **Rackless integrated X-Y mechanical stage**
- **Epi-fluorescence illumination with four monochromatic LEDs**
- **3 W NeoLED™ adjustable transmitted illumination**
- **Integrated carrying grip**
- **Cable storage system and anti-theft system**
- **10 Years warranty**

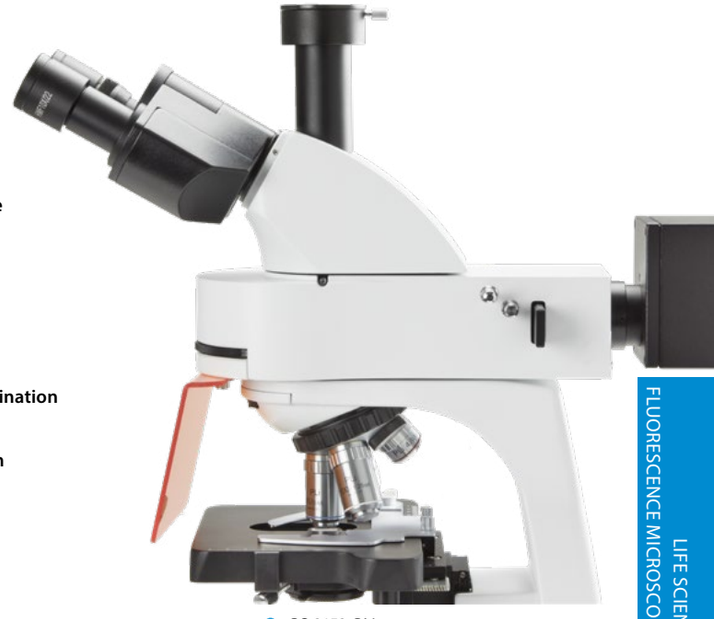

BS.3153-PLi

SPECIFICATIONS

EYEPIECES
Wide field HWF 10x/22 mm secured eyepieces (Ø 30 mm tube)

HEAD
The bScope® is equipped with a Siedentopf type head and with 30° inclined Ø 30 mm tubes and with a ± 5 diopter adjustment on left eyepiece. The interpupillary distance is adjustable between 48 to 76 mm

The trinocular head comes with a Ø 23.2 mm tube, ensuring maximum flexibility. The prisms inside the heads are designed to minimize the light absorption for perfect digital imaging. The trinocular head has a 20:80 beamsplitter and generates an erect image

NOSEPIECE
Revolving and reversed ball-bearing quintuple nosepiece

OBJECTIVES
The state-of-the-art production techniques and multi layer coatings used for the manufacturing of the bScope® objectives enable the bScope® to be used for the most demanding applications. World class spherical aberration correction and modern CNC and assembly technology ensure the perfect centering of the objectives

- Plan infinity corrected PLi 4x/0.10, 10x/0.25, 20x/0.40, S40x/0.65, S60x/0.85 and S100x/1.25 oil immersion IOS objectives for applications where violet or Ultra-Violet excitation is not needed
- Plan Fluarex infinity corrected PLFi 4x/0.10, 10x/0.25, 20x/0.40, S40x/0.65 and S100x/0.90 IOS objectives for applications where either higher resolving power or violet or ultra-violet excitation is needed

All S40x, S60x and S100x oil immersion objectives are spring loaded. All optics are anti-fungus treated and anti-reflection coated for maximum light throughput

FOCUSING

Double coaxial, low-positioned coarse and fine adjustments with 180 graduations. Precision 1.1 µm, 200 µm per rotation, total travel range is approximately 19 mm. Supplied with an adjustable rack stop to prevent damage to sample and objectives. The coarse adjustment is equipped with friction control

STAGE

The bScope® is equipped with a scratch-resistant 152/197 x 131 mm stage with integrated 75 x 36 mm X-Y rackless mechanical stage, Vernier scale, soft-close removable specimen holder. The rackless stage has no protruding parts, enables more smooth movements and is safer in use. Low-positioned X-Y control knobs prevent fatigue during long working sessions

CONDENSER FOR BRIGHTFIELD

The standard height adjustable Abbe N.A. 1.25 condenser for brightfield comes with an iris diaphragm and swing-out filter holder

CONDENSER FOR ZERNIKE PHASE CONTRAST

The height adjustable Zernike NA. 1.25 phase contrast disc condenser comes with phase annuli for 10/20/S40x and S100x phase contrast objectives, an iris diaphragm, a swing-out filter holder and also a BF position for brightfield contrast. Phase contrast objectives are available in either EPL-PHi or PL-PHi versions. Supplied with alignment telescope and green filter

CONDENSER FOR SIMPLE PHASE CONTRAST

The height adjustable NA. 1.25 simple phase contrast condenser has a free slot for either a slider for 10/S40x phase contrast objectives, or a slider for 20/S100x phase contrast objectives. The condenser has an iris diaphragm and filter holder. The condenser includes a BF position for brightfield contrast with an iris diaphragm and filter holder. Phase contrast objectives available in either EPL-PHi or PL-PHi version. Supplied with alignment telescope and green filter

POLARIZATION

The bScope® has an integrated slot above the nosepiece for an optional polarization filter

FLUORESCENCE ATTACHMENT

- Epi-illumination with four 5 W LEDs for fluorescence excitation from 450 to 470 nm (blue), 515 to 535 nm (green), 390 to 400 (violet) and 360 to 370 nm (ultraviolet). External 100-240 V power supply
- Fluorescence filter set for blue excitation (EX450-490 (BP) DM505 EM515 (LP)), green excitation (EX495-555 (BP) DM580 EM595 (LP)), UV excitation (EX320-380 (BP) DM420 EM435 (LP)) and violet excitation (EX380-415 (BP) DM460 EM475 (LP))
- Supplied with UV protection shield

NEOLED™ TRANSMITTED ILLUMINATION

The 3 W adjustable Köhler NeoLED™ transmitted illumination is powered by an internal 100-240 V power supply making it suitable for worldwide use. The innovative NeoLED™ design offers larger apertures, allowing the optical system of the bScope® microscope to produce images at higher resolutions, very close to the theoretical diffraction limit of the optics. Other benefits of the NeoLED™ is the low energy consumption, no heating and a long operating life span

KÖHLER ILLUMINATION

A Köhler illumination ensures for all infinity corrected IOS models the highest possible contrast and the maximum achievable resolving power. Generates a uniform illumination of the sample and eliminates all interference from dust on lenses and side glare of the light source

Ergonomic carrying grip for easy transportation

CORDLESS USE

The optional rechargeable AA batteries turn the bScope® into a cordless system for transmitted illumination

CSS – CABLE STORAGE SYSTEM

Allows users to easily stow away excess cable length into the back of the instrument during operation and to roll up the power cable for easy storage

CARRYING GRIP

The integrated carrying grip at the back of the microscope ensures safe transportation of the microscope

ANTI-THEFT SLOT

At the back of the microscope a Kensington Security Slot is placed, which can be used to secure the instrument from theft

PACKAGE CONTENT

Smart polystyrene packaging ensures a low environmental footprint while maintaining maximum safety during transport. Supplied with power cord, dust cover, tools, a spare fuse, white filter, user manual and 5 ml immersion oil

BS.3153-PLi

BSCOPE® WITH EPI-FLUORESCENCE 4 LED ILLUMINATION (BLUE, GREEN, VIOLET AND ULTRA-VIOLET)

MODELS	Trinocular	HWF 10x/22 mm eyepieces	Quintuple nosepiece Plan PLi 4/10/S40/ S100x	Quintuple nosepiece Plan Fluarex PLFi 4/10/S40/ S100x *
BS.3153-PLi	•	•	•	
BS.3153-PLFi	•	•		•

**The plan Fluarex infinity corrected IOS objectives are recommended for applications where either higher resolving power or violet or ultra-violet excitation is needed*

DIMENSIONS

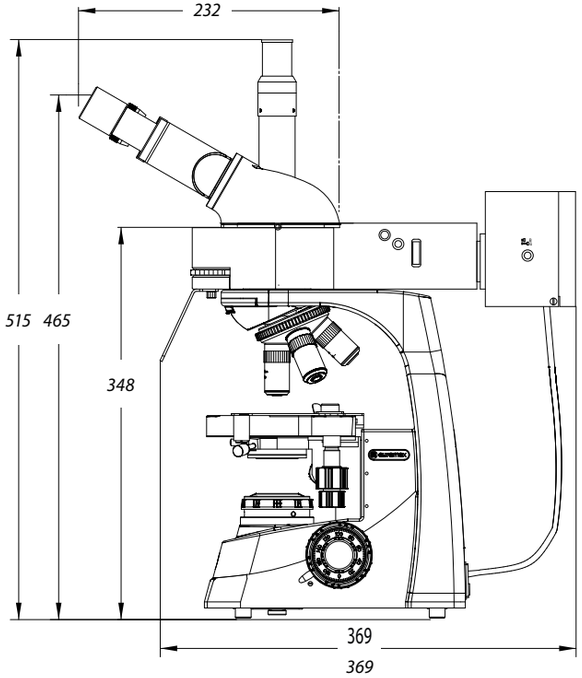

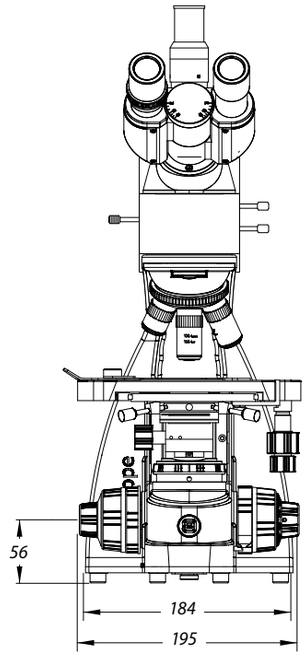

ACCESSORIES AND SPARE PARTS

EYEPIECES

BS.6310 WF 10x/22 mm eyepiece, Ø 30 mm tube
BS.6310-M WF 10x/22 mm eyepiece, Ø 30 mm tube
BS.6315 WF 15x/12 mm eyepiece, Ø 30 mm tube
BS.6399 Pair of eyecups, Ø 30 mm tube

OBJECTIVES

BS.8404 Plan PLi 4x/0.10 IOS objective. WD 21.0 mm
BS.8410 Plan PLi 10x/0.25 IOS objective. WD 5.0 mm
BS.8420 Plan PLi 20x/0.40 IOS objective. WD 8.8 mm
BS.8440 Plan PLi S40x/0.65 IOS objective. WD 0.66 mm
BS.8400 Plan PLi S100x/1.25 oil immersion IOS objective. WD 0.36 mm
BS.7400 Plan Fluarex S100x/1.30 oil immersion IOS objective. WD 0.13 mm

WD = working distance

For phase contrast equipment and accessories, see chapter 4 Life science, bScope®

CONDENSERS

BS.9102 Abbe condenser 1,25 NA with slot for darkfield and phase contrast sliders
BS.9170 Slider with darkfield stop for standard Abbe condenser with slot
BS.9105 Swing-out Abbe condenser 0.9/1.25 NA

POLARIZATION ATTACHMENTS

BS.9647 Polarization polarizer Ø 6 mm for slider under bScope® head
BS.9651 Polarization attachment for lamphouse of bScope® with 360° scale

MISCELLANEOUS

BS.9993 NeoLED™ replacement unit
BS.9200-LED/WOO Epi-Fluorescence illuminator Life science microscopes
AE.1370 Set of rechargeable AA batteries, three pieces
AE.5226 Glass fuses 3A 250V, 10pcs

CAMERA ACCESSORIES

AE.5130 Universal Ø 23.2 mm tube adapter with built-in 2x lens for SLR photo camera with APS-C sensor. Needs T2 adapter
AE.5025 T2 adapter for Nikon D SLR digital camera
AE.5040 T2 adapter for Canon EOS SLR digital camera

DISPOSABLES

PB.5155 Microscope slides 76 x 26 mm, ground edges, 50 pieces
PB.5165 Cover glasses 18 x 18 mm, thickness 0.13-0.17 mm, 100 pieces
PB.5168 Cover glasses 22 x 22 mm, thickness 0.13-0.17 mm, 100 pieces
PB.5245 Lens cleaning paper, 100 sheets per pack
PB.5255 Immersion oil (25 ml). n = 1.515
PB.5274 Isopropyl alcohol 99% (200 ml)
PB.5275 Cleaning kit: lens cleaning fluid, lint free lens tissue/ paper, brush, air blower, cotton swabs
PB.5276 Microscope maintenance and servicing kit, 16pcs: cleaning brush, 6 pcs screwdriver set, air blower, 3 pcs Allen key, 1.5, 2, 2.5 mm, lens cleaning fluid 20 ml, cleaning cloth 140 x 140 mm, 100 pcs lens tissue sheets, tube of maintenance grease, 10 ml bottle of oil, packed in a nice toolbox

5 LIFE SCIENCE FLUORESCENCE MICROSCOPES

Delphi-X observer

NeoLED™ euromex optical technology

Delphi-X Observer™

fluorescence

State-of-the-art microscopes for advanced life science fluorescence applications. The outstanding optical performance of the Delphi-X Observer™ makes it ideal for life science fluorescence applications, where a high performance optical system is required. The larger 22 mm fields of view of the super wide field eyepieces and the high numerical aperture of the plan Fluarex 60 mm parfocal EIS objectives enable perfect observations and color rendering at high resolving power

DX.3153-PLi

product information

DX.3153-PLi
454 (h) x 260 (w) x 367 mm (d) | 26 kg
DX.3153-PLi/HAL
454 (h) x 260 (w) x 480 mm (d) | 26.5 kg

HIGHLIGHTS

- **Trinocular model**
- **Ergonomic tilting head**
- **Super wide field SWF 10x/22 mm, Ø 30 mm tubes**
- **Sextuple reversed nosepiece**
- **Enhanced infinity corrected EIS optical system**
- **60 mm parfocal plan EIS objectives**
- **60 mm parfocal plan semi-apochromatic EIS objectives**
- **M25 objective thread mounting**
- **100 W HBO mercury vapor illumination**
- **3 W NeoLED™ illumination**
- **100 W halogen illumination**

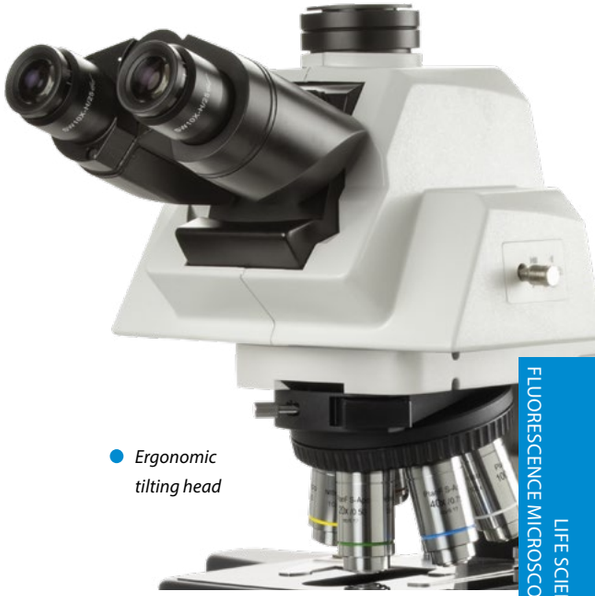

Ergonomic tilting head

SPECIFICATIONS

EYEPIECES

Extended wide field EWF 10x/22 mm, Ø 30 mm tubes

STANDARD HEAD

Siedentopf trinocular head with 30° inclined tubes. Interpupillary distance adjustable between 47 and 78 mm. Three position beam splitter (0:100/ 80:20 / 100:0). Diopter ± 5 adjustments on both eyepieces

ERGONOMIC TILTING HEAD

Optional ergonomic 0 to 35° tilting trinocular head supplied with SWF 10x/25 mm eyepieces, interpupillary distance 47-78 mm and photo tube, standard with Ø 23.2 mm tube

NOSEPIECE

Revolving sextuple reversed nosepiece on ball-bearings with 25 mm mounting threads for objectives

MOTORIZED MODEL

The Delphi-X Observer™ can be supplied with a motorized revolving sextuple reversed nosepiece together with a flip-down condenser. A precise step-motor allows the user to switch from objective by a simple push of a button. Another button allows quick switching between two preselected objectives. The electronics memorize automatically the light intensity levels for each objective after switching. The electronics also automatically flip-out the front lens of the flip-down condenser when the 4x objective is used

ENHANCED INFINITY SYSTEM (EIS)

The enhanced infinity system (EIS) of the Delphi-X Observer™ consists of super wide field SFWF 10x22 mm eyepieces, high numerical aperture 60 mm parfocal objectives and a 200 mm focal length tube lens. This tube lens reduces the angle of the light rays passing through the optics and as a direct result it significantly improves the chromatic aberration corrections and contrast of the images produced. The objectives with larger diameter enable much higher numerical apertures, improving the overall resolving power of the optical system

PLAN ACHROMATIC EIS OBJECTIVES

(clinical routine applications)

The Delphi-X Observer™ is supplied with plan achromatic 4x/0.10, 10x/0.25, 20x/0.40, S40x/0.65 and S100x/1.25 (oil immersion) infinity corrected EIS objectives

Available as an option:

2x/0.06, S50x/0.95 (oil immersion) and S60x/0.80

OBJECTIVES

Plan PLi	2x/0.06*	4x/0.10	10x/0.25	20x/0.40	S40x/0.65	S50x/0.95 oil*	S60x/0.80*	S100x/1.25 oil	S100x/1.25 oil iris*
Plan semi-apo Fluarex		4x/0.13	10x/0.30	20x/0.50	S40x/0.75			S100x/1.30 oil	

All objectives are 60 mm parfocal and have a M25 mounting thread , all optics are anti-fungus treated and anti-reflection coated for maximum light throughput and all S40x, S50x, S60x and S100x objectives are spring loaded
** Optional*

PLAN SEMI-APOCHROMATIC FLUAREX OBJECTIVES

(Anatomo- and histopathology applications)

The Delphi-X Observer™ can also be supplied with plan semi-apochromatic 4x/0.13, 10x/0.30, 20x/0.50, S40x/0.75 and S100x/1.30 (oil immersion) infinity corrected EIS objectives

STAGE

190 x 152 mm stage with 78 x 32 mm integrated right-handed mechanical stage. Supplied with scratch-resistant Gorilla glass. Sapphire scratch-resistant glass is available on request. Left-handed mechanical stage is available on request

FOCUSING

Coaxial coarse and fine adjustment, 100 graduations, 1 µm precision, 100 µm per rotation, total travel range is approximately 35 mm. Supplied with an adjustable rack stop to prevent damage to sample and objectives. The coarse adjustments are equipped with friction control. The focusing knobs can be switched from left to right according to the user's preference

CONDENSER FOR BRIGHTFIELD

In height adjustable N.A. 0.90/1.25 Abbe swing-out condenser with numerical aperture identification marks

ILLUMINATION FOR FLUORESCENCE

The attachment for fluorescence of the Delphi-X Observer™ is equipped with a rotating block which can contain up to six filter cubes and supplied with 100 W HBO mercury vapor light source for a broad powerful light spectrum

DIASCOPIC ILLUMINATIONS

Two Köhler illuminations are available for the Delphi-X Observer™ microscope:

- Diascopic intensity adjustable 3 W NeoLED™ Köhler illumination with internal 100-240 V power supply
- Diascopic intensity adjustable 100 W halogen Köhler illumination with internal 100-240 V power supply
- The diascopic halogen illumination comes with two push-in/push-out neutral density filters for smooth attenuation of the light intensity for all kind of samples. The diascopic NeoLED™ illumination comes with one neutral density filter

LIGHT INTENSITY MEMORY FUNCTION

The electronics memorize automatically the light intensity levels for each objective after switching. The electronics also automatically flip out the front lens of the flip-down condenser when the 4x objective is used. Optionally available, only for a new Delphi-X Observer

NEOLED™

The innovative NeoLED™ design is a combination of a custom LED and a specially designed thin lens with a short focal length in order to obtain three main benefits:

- More oblique light from the LED light source can be captured, which increases the light output significantly
- Less energy is required to achieve this level of light intensity
- The larger aperture of NeoLED™ allows the optical system to produce images at higher resolutions, very close to the theoretical diffraction limit of the optics

ICARE SENSOR

The unique iCare Sensor is developed to avoid unnecessary loss of energy. The illumination of the microscope automatically switches off shortly after microscopists step away from their position

STANDARD GENERAL PURPOSE FLUORESCENCE FILTER SETS

Supplied with standard fluorescence filter sets for blue excitation (EX460-495 DM505 EM510LP) and green excitation (EX510-550 DM570 EM750LP), UV shield and external power supply. Optional: fluorescence filter sets for UV excitation (EX330-385 DM400 EM420LP) and violet excitation (EX400-410 DM455 EM460LP). On special request, the microscope can also be supplied with optimized and zero-pixel shift optimized filter sets on request. See end of this chapter

BLUE EXCITATION (DX.9745)

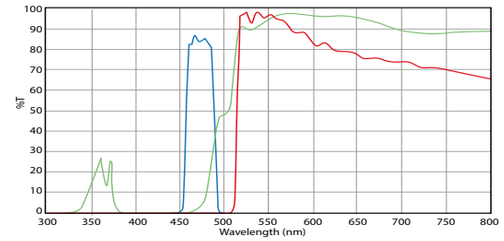

GREEN EXCITATION (DX.9746)

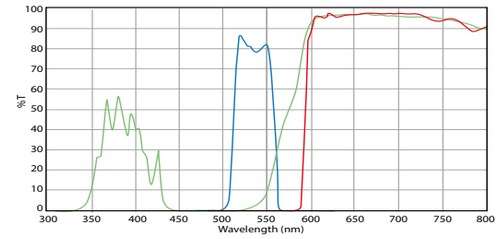

VIOLET EXCITATION (DX.9747)

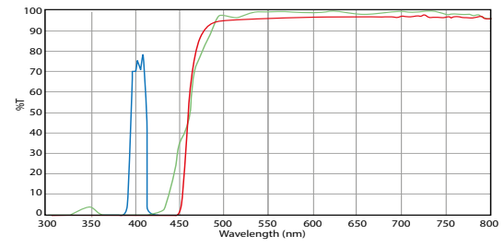

ULTRA-VIOLET EXCITATION (DX.9748)

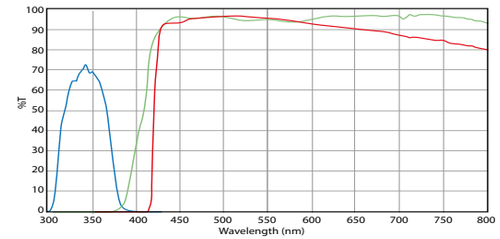

Other with more specific and optimized and application related fluorescence filter sets are also available

CARRYING GRIP

The carrying grip at the back of the microscope ensures safe transportation of the microscope and the integrated tool & holder makes sure the right tool is always available

PACKAGE CONTENT

Supplied with power cord, dust cover, a spare fuse, user manual and 5 ml immersion oil. All packed in a polystyrene box

DIMENSIONS

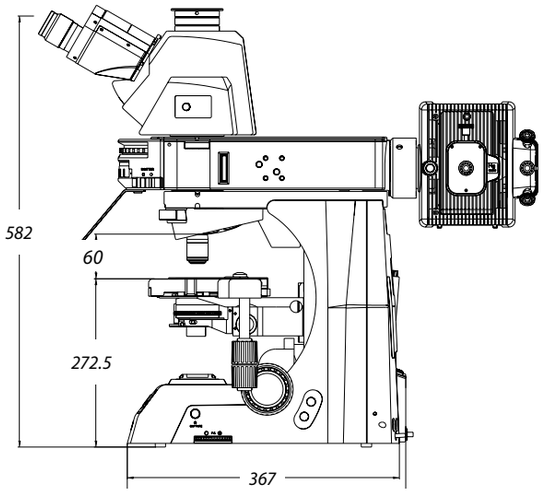

DELPHI-X OBSERVER FOR FLUORESCENCE WITH TRINOCULAR HEAD

MODELS	SWF 10x/22 mm eyepieces	Plan 4/10/20/S40/ S100x oil EIS objectives	Plan semi-apo Fluarex 4/10/20/ S40/S100x oil EIS objectives	3 W NeoLED™ illumination	100 W Halogen illumination
DX.3153-PLi	•	•		•	
DX.3153-APLi	•		•	•	
DX.3153-PLi/HAL	•	•			•
DX.3153-APLi/HAL	•		•		•

FOR ORDERING MOTORIZED MODELS

Substitute the third digit 5" of the model reference with the digit 7". Example: DX.1173-PLi = DX.1153-PLi model but with motorized nosepiece, flip-down condenser and automatic light control

FOR ORDERING LIGHT INTENSITY MEMORY FUNCTION ONLY

Substitute the third digit 5" of the model reference with the digit 8". Example: DX.1183-PLi = DX.1153-PLi model but with automatic light control

ACCESSORIES AND SPARE PARTS

EYEPIECES

DX.6210 Super wide field SWF 10x/22 mm eyepiece for Ø 30 mm tube
DX.6210-CM Super wide field SWF 10x/22 mm eyepiece with micrometer and crosshairs for Ø 30 mm tube
DX.6210-SG Super wide field SWF 10x/22 mm eyepiece with 20 x 20 square grid reticle. For Ø 30 mm tube
DX.6012 Wide field WF 12.5x/17.5 mm eyepiece for Ø 30 mm tube
DX.6015 Wide field WF 15x/16 mm eyepiece for Ø 30 mm tube
DX.6020 Wide field WF 20x/12 mm eyepiece for Ø 30 mm tube
DX.6099-L Eyecup for eyepieces

OBJECTIVES INFINITY EIS

DX.7201 60 mm plan PLi 1x/0.04 objective. WD 3.2 mm
DX.7202 60 mm plan PLi 2x/0.06 objective. WD 7.5 mm
DX.7204 60 mm plan PLi 4x/0.10 objective. WD 30 mm
DX.7210 60 mm plan PLi 10x/0.25 objective. WD 10.2 mm
DX.7220 60 mm plan PlLi 20x/0.40 objective. WD 12 mm
DX.7240 60 mm plan PLi S40x/0.65 objective. WD 0.7 mm
DX.7250 60 mm plan PLi S50x/0.95 oil objective. WD 0.19 mm
DX.7260 60 mm plan PLi S60x/0.80 objectives. WD 0.3 mm
DX.7200 60 mm plan PLi S100x/1.25 oil immersion objective. WD 0.2 mm
DX.7200-I 60 mm plan PLi S100x/1.25 oil immersion objective with built-in iris diaphragm. WD 0.2 mm
DX.7304 60 mm plan semi-apochromatic PLi-apo Fluarex 4x/0.13 objective. WD 16.5 mm
DX.7310 60 mm plan semi-apochromatic PLi-apo Fluarex 10x/0.30 objective. WD 8.1 mm
DX.7320 60 mm plan semi-apochromatic PLi-apo Fluarex 20x/0.50 objective. WD 2.1 mm
DX.7340 60 mm plan semi-apochromatic PLi-apo Fluarex S40x/0.75 objective. WD 0.7 mm
DX.7300 60 mm plan semi-apochromatic PLi-apo Fluarex S100x/1.30 oil immersion objective. WD 0.15 mm

WD = working distance

MISCELLANEOUS

DX.9501-R Stage with Gorilla glass. Right handed
DX.9501-L Stage with Gorilla glass. Left handed
DX.9504-R Stage with Sapphire glass. Right handed
DX.9504-L Stage with Sapphire glass. Left handed
DX.9501-LG Option* for left handed stage with Gorilla glass
DX.9504-RS Option* for right handed stage with Sapphire glass
DX.9504-LS Option* for left handed stage with Sapphire glass
SL.1385 100 W HBO mercury vapor lamp for fluorescence

** Option mounted only on new Delphi-X Observer™ microscopes (resp. DX.xx5x-xxx/RS and DX.xx5x-xxx/LS)*

CONDENSERS

DX.9105 Abbe condenser with 0.9/1.25 swing-out front lens
DX.9110 Dry darkfield condenser
DX.9112 Oil immersion darkfield condenser

CAMERA ACCESSORIES

DX.9810 C-mount with 1 magnification for C-mount camera
DX.9835 C-mount with high resolution relay 0.35x objective for 1/3 inch C-mount camera
DX.9850 C-mount with high resolution relay 0.50x objective for 1/2 inch C-mount camera
DX.9863 C-mount with high resolution relay 0.63x objective for 2/3 inch C-mount camera
AE.5130 Universal SLR adapter with built-in 2x lens for standard 23.2 mm tube. Needs T2 adapter
AE.5025 T2 adapter for Nikon D SLR digital camera
AE.5040 T2 adapter for Canon EOS SLR digital camera

DX.9501-L Stage with Gorilla glass. Left handed

MISCELLANEOUS

DX.9660 Simple polarization kit
DX.9662 Special polarization kit for gout
DX.9704 Yellow filter for lamphouse, diameter 45 mm
DX.9960 100 W 24 V halogen bulb (revision 1 models)
DX.9961 100 W 12 V halogen bulb (revision-2 models)
DX.9993 3 Watt LED replacement
AE.5214 500 mA 250 V fuses for LED models, 10pcs
AE.5216 5 A 250 V fuses for halogen models, 10pcs

DX.9112 Oil immersion darkfield condenser

DISPOSABLES

PB.5155 Microscope slides 76 x 26 mm, ground edges, 50 pieces per pack
PB.5165 Cover glasses 18 x 18 mm, 0.13-0.17 mm, 100 pieces
PB.5168 Cover glasses 22 x 22 mm, 0.13-0.17 mm, 100 pieces
PB.5245 Lens cleaning paper, 100 sheets per pack
PB.5255 Immersion oil, 25 ml. Refraction index n = 1.515
PB.5274 Isopropyl alcohol 99%, 200 ml
PB.5275 Cleaning kit: lens fluid, lint free lens tissue/paper, brush, air blower, cotton swabs

Oxion

NeoLED™ euromex optical technology

Oxion

fluorescence with FluoLED

The Oxion FluoLed comes with a 455 nm LED and one filter cube, especially developed for efficient and fast detection of tuberculosis by the Auramine-O fluorochrome. Other FluoLED 470 and 560 nm wavelengths are also available. The Oxion fluorescence microscopes are intended for professionals in life science applications, university labs and research centers

● *OX.3230*

product information

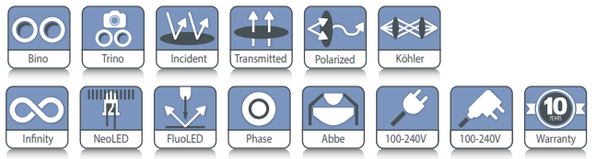

OX.3230
454 (h) x 185 (w) x 294 mm (d) | 8.7 kg

HIGHLIGHTS

- **Binocular and trinocular models**
- **HWF 10x/22 mm eyepieces**
- **Reversed nosepiece for a maximum of five objectives**
- **Plan, plan Fluarex and plan semi apochromatic**
- **Fluarex IOS objectives**
- **Integrated mechanical stage**
- **Coaxial coarse and fine adjustments**
- **Height adjustable Abbe N.A. 1.25 condenser with iris diaphragm and filter holder**
- **3 W LED transmitted illumination**
- **Fluorescence attachment with single filter block and 455 nm (blue), 470 nm (green) or 560 nm (UV) incident illumination**
- **Ergonomic stand and head**
- **10 Years warranty**

● *Close up of the OX.3230*

SPECIFICATIONS

EYEPIECES

HWF 10x/22 mm eyepieces. All eyepieces can be secured by an Allen screw

HEAD

Binocular and trinocular Siedentopf type heads are supplied with 30° inclined tubes, interpupillary distance from 50 to 75 mm and two ± 5 diopter adjustments. A unique rotating system allows the ergonomic positioning of both tubes in a high (431 mm) and in a low position (397 mm)

NOSEPIECE

Revolving and reversed nosepiece for a maximum of five objectives

OBJECTIVES

- Plan 4x/0.10, 10x/0.25, S40x/0.65 and S100x/1.25 oil immersion IOS objectives
- Plan semi apochromatic Fluarex 4x/0.10, 10x/0.25, S40x/0.65 and S100x/1.25 oil immersion IOS objectives

All S40x, S60x and S100x oil immersion objectives are spring loaded. All optics are anti-fungus treated and anti-reflection coated for maximum light throughput

FOCUSING

Coaxial coarse and fine adjustments, 200 graduations, 1 µm per graduation, 200 µm per rotation, total travel range is approximately 28 mm. Supplied with an adjustable rack stop to prevent damage to sample and objectives. The coarse adjustments are equipped with friction control

STAGE

150 x 140 mm stage with integrated 76 x 50 mm X-Y mechanical stage

A ceramic stage is also available on request

CONDENSER FOR BRIGHTFIELD

Height adjustable Abbe condenser N.A. 1.25 with iris diaphragm. Supplied with a white diffusion filter. A darkfield stop in slider for the 10x, 20x and S40x objectives can also be inserted with magnification indication

CONDENSER FOR FLUORESCENCE

The fluorescence attachment is equipped with an integrated condenser with iris diaphragm and a field diaphragm

ILLUMINATION FOR BRIGHTFIELD

All models are supplied with a 3 W adjustable NeoLED™ illumination with built-in 100-240 V power supply. Köhler illumination with field diaphragm

ILLUMINATION FOR FLUORESCENCE (LED)

The FluoLED attachment is standard delivered with a **455 nm LED** (EX 425-475, DM 480, EM 485 LP filter set) for detection of tuberculosis with Auramine-O fluorochrome. FluoLED attachments with **365 nm LED** (EX 340-390, DM 400, EM 420 LP filter set, DAPI), **470 nm LED** (EX 450-490, DM 495, EM 500-525 filter set, FITC/GFP/eGFP) and **560 nm LED** (EX 540-580, DM 585, EM 608-690 filter set, TexasRed) are also available. On special request, the microscope can also be supplied with optimized and zero-pixel shift optimized filter sets on request. See end of this chapter

PACKAGE CONTENT

Supplied with power cord, dust cover, white filter, user manual and 5 ml immersion oil for models with S100x objective. All packed in a polystyrene box

MODELS	Binocular	Trinocular	Plan 4x/10x/S40x/S100x objectives	Plan semi apo Fluarex 4x/10x/S40x/S100x objectives	455 nm FluoLED illumination
OX.3230	•		•		•
OX.3235		•	•		•
OX.3232	•			•	•
OX.3237		•		•	•

ACCESSORIES AND SPARE PARTS

EYEPIECES

AE.3210 HWF 10x/22 mm eyepiece
AE.3215 HWF 15x/13 mm eyepiece
AE.3223 HWF 10x/22 mm eyepiece with 10 mm/100 micrometer
AE.3225 Pair of eyecups

OBJECTIVES

AE.3102 Plan 2x/0.06 IOS objective. WD 5 mm
AE.3104 Plan 4x/0.10 IOS objective. WD 11.9 mm
AE.3106 Plan 10x/0.25 IOS objective. WD 12.1 mm
AE.3108 Plan 20x/0.40 IOS objective. WD 1.5 mm
AE.3110 Plan S40x/0.65 IOS objective. WD 0.36 mm
AE.3112 Plan S60x/0.85 IOS objective. WD 0.30 mm
AE.3114 Plan S100x/1.25 oil IOS objective. WD 0.18 mm
IS.7400 Plan Fluarex PLFi S100x/1,30 IOS infinity corrected objective. 0.17 mm cover glass correction. WD 0.13 mm
AE.3144 Plan semi apochromatic Fluarex 4x/0.13 IOS objective. WD 18.5 mm
AE.3146 Plan semi apochromatic Fluarex 10x/0.30 IOS objective. WD 10.6 mm
AE.3148 Plan semi apochromatic Fluarex 20x/0.50 IOS objective. WD 2.33 mm
AE.3152 Plan semi apochromatic Fluarex S40x/0.75 IOS objective. WD 0.6 mm
AE.3156 Plan semi apochromatic Fluarex S100x/1.28 oil immersion IOS objective. WD 0.21 mm

WD = working distance

POLARIZATION ATTACHMENTS

AE.3190 Polarizer/analyzer set
AE.3192 Polarizer slider for nosepiece
AE.3194 Polarizer for lamphouse

AE.3194 Polarizer for lamphouse

FILTERS

AE.3196 Frosted white filter 45 mm, to be mounted on lamphouse
AE.3198 Blue filter 45 mm, to be mounted on lamphouse
AE.3200 Yellow filter 45 mm, to be mounted on lamphouse
AE.3202 Green filter 45 mm, to be mounted on lamphouse

AE.3192 Polarizer slider

CAMERA ACCESSORIES

AE.5120-2 Standard 23.2 mm diameter tube for Oxion photo port revision-2
AE.5130 Universal SLR camera adapter with 2x projection lens for 23.2 mm tubes. Needs T2 adapter and AE.5120
AE.5025 T2 adapter for Nikon D digital SLR cameras
AE.5040 T2 adapter for Canon EOS digital SLR cameras
OX.9850 CS/C mount with 0.5x objective for 1/2" sensor cameras
OX.9833 CS/C mount with 0.33x objective for 1/3" sensor cameras

MISCELLANEOUS

AE.5168-O Heating stage and temperature controller up to 50°C. Only with new microscopes
SL.5510 NeoLED™ replacement unit for Oxion
AE.3199 Glass fuses 3.15 A 250 V, 10 pieces

AE.5168-O Heating stage and temperature controller

DISPOSABLES

PB.5155	Microscope slides 76 x 26 mm, ground edges, 50 pcs	**PB.5245**	Lens cleaning paper, 100 sheets per pack
PB.5165	Cover glasses 18 x 18 mm, thickness 0.13-0.17 mm, 100 pieces	**PB.5255**	Immersion oil, n = 1.515 (25 ml)
		PB.5274	Isopropyl alcohol 99% (200 ml)
PB.5168	Cover glasses 22 x 22 mm, thickness 0.13-0.17 mm, 100 pcs	**PB.5275**	Cleaning kit: lens cleaning fluid, lint free lens tissue, brush, air blower, cotton swabs

DIMENSIONS

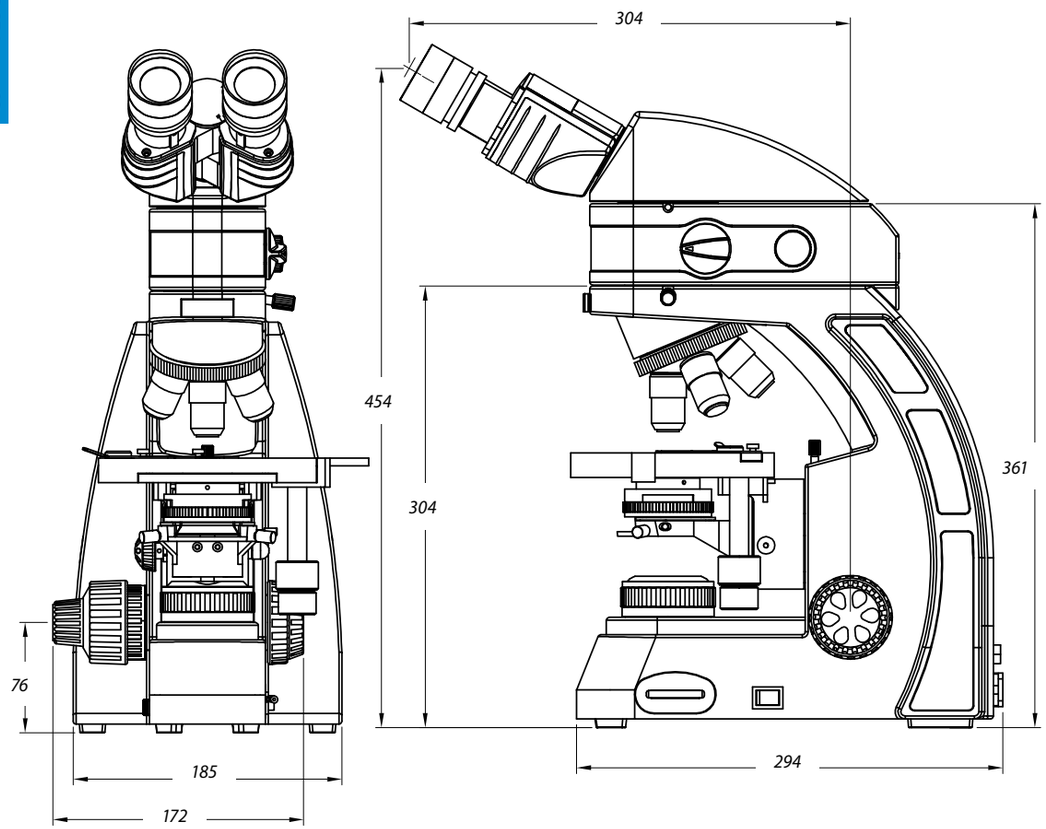

about **fluorescence**

It took many years - since the discovery by Osamu Shimomura of the first proteins aequorin and green fluorescent protein (GFP) in the bio-luminescent jellyfish Aequorea Victoria around the sixties - to develop a specific fluorescence microscope for live-cell imaging which permits essential progress in medical and biological sciences. Today it has become an important tool in Life and Materials Sciences

INTRODUCTION TO FLUORESCENCE MICROSCOPY

Fluorescence is the phenomenon of subsequent specific emission of photons by a fluorophore (chemical compound) after the absorption of specific excitation photons. Fluorophores are used as a dye for staining cells, tissues or materials that can be observed as markers under a fluorescence microscope

DESIGN OF A FLUORESCENCE MICROSCOPE

The basic function of a fluorescence microscope is to bring specific excitation" wavelengths to a stained specimen (with a specific fluorophore) and to catch the subsequent weak emission wavelengths in order to visualize the fluorescent structures on the retina of the eyes or on an imaging camera

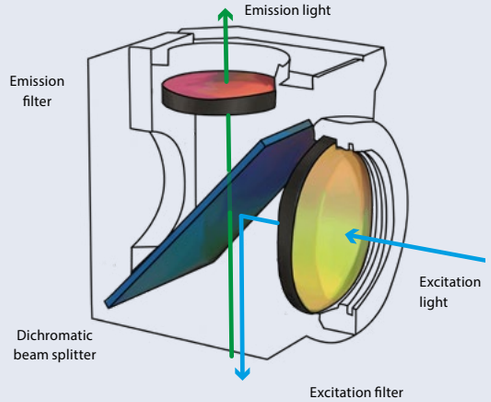

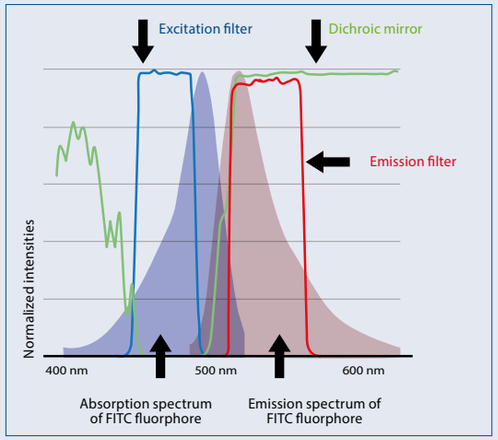

The excitation light of a microscope for fluorescence is provided with either a mercury vapor light source or a monochrome LED. The selection of the specific fluorophore excitation light is done by a so-called emission interference filter that is mounted in a cube together with a dichroic mirror (beam splitter) and the emission filter. The filtered excitation light is further reflected by the dichroic mirror through the objectives towards the sample

The fluorophore(s) inside the specimen will absorb this excitation energy with some efficiency (quantum yield) and will start re-emitting the so-called emission energy, visible light with longer wavelengths than the absorbed light.
The emission light from the specimen that fluoresces will be collected by the objective, pass the dichroic mirror and is separated from excitation and other unwanted light wavelengths by the emission filter. The filtered emission light is further projected to the eyepieces or/and camera imaging sensor

UV	Violet	Blue	Cyaan	Green	Yellow	Orange	Red
315-380	380-450	450-490	590-515	515-570	570-590	590-620	620-750

Delphi-X Inverso™
fluorescence

The Delphi-X Inverso™ for fluorescence is an inverted microscope for the professional who needs to observe tissues or cells stained with fluorescence dyes. Super contrast semi-apochromatic Fluarex™ objectives with collar adjustment ring assure perfect observation of cells or tissues in 1.2 mm thick Petri dishes or flasks

DI.3053-PLPHFi

product information

Trino | Incident | Transmitted

Infinity | LED | FluoLED | HG-HBO | Phase | 100-240V | Warranty

DI.1053-PLPHFi
665 (h) x 276 (w) x 800 mm (d) | 36.0 kg

HIGHLIGHTS

- **Life science applications**
- **Observation of fluorescence in tissues and cells**
- **Brightfield, phase contrast fluorescence observations**
- **DIC (differential interference contrast)**
- **Long working distance IOS plan semi-apochromatic Fluarex achromatic objectives**
- **Revolving sextuple nosepiece**
- **5 W LED or 100 W halogen transmitted illumination**
- **100 W HBO mercury vapor fluorescence illumination**
- **Backwards tilting condenser arm**
- **Easy placement of large objects**
- **10 Years warranty**

Filter cubes with fluorescence filters

SPECIFICATIONS

EYEPIECES
Pair of HWF plan 10x/25 mm or 10x/22 mm eyepieces with diopter adjustment

HEAD
Trinocular 45° inclined tubes. Interpupillary distance of 47 to 78 mm. Trinocular head with 100-0, 80/20 and 0/100 positions

NOSEPIECE
Revolving sextuple nosepiece on ball-bearings

OBJECTIVES
High numerical infinity semi-apochromatic long working distance plan phase Fluarex PLPHFi 10x/0.30, 20x/0.45, S40x/0.60 IOS objectives enable the sub-cellular structures. An optional 60x/0.80 IOS objective is also available. The 20x, S40x and optional S60 objectives are equipped with collar adjustment ring for glass thicknesses from 0 to 1.2 mm
Fluarex™ objectives are made of low-absorption glass. Fluarex™ is a trademark of Euromex microscopen bv. All optics are anti-fungus treated and anti-reflection coated for maximum light throughput

STAGE
Stage 340 x 230 mm, equipped with a coaxial mechanical 130 x 85 mm X-Y stage. Supplied with:

- Metal insert for O 38 mm cell culture dish
- Metal insert for O 54 mm cell culture dish or 76 x 26 mm slides
- Metal insert for Multiwell plates (127.76 x 85.48 mm)
- Metal insert for Teraski plates (83.3 x 58.0 mm)
- Optional universal cell culture holder

CONDENSER
Rotating N.A. 0.55 condenser with iris diaphragm. Working distance 26 mm. Supplied with phase contrast annuli for 10x/20x, 40x and 60x objectives and the DIC prisms for the 10x/20x/40x and 60x objectives. Three filter holders allow the insertion of Ø 38 mm filters in the optical path. The arm with condenser can be tilted backwards for convenient access to the stage. This allows easy placement of large objects like flasks and Petri dishes

LENS CHANGER
A lens changer with a 1.5x lens allow intermediary magnifications of 1.5 times the standard objective magnifications. Switching from 20x to 30x or 40 to 60 and from 60x to 90x magnification can be done without the need to re-focus on the sample

FLUORESCENCE ATTACHMENT

The Delphi-X Inverso for fluorescence microscopy is supplied with a 6-position fluorescence filter set wheel and comes with two fluorescence filter sets for blue and green excitation (DI.9745 and DI.9746). On special request, the microscope can also be supplied with optimized and zero-pixel shift optimized filter sets on request. See end of this chapter

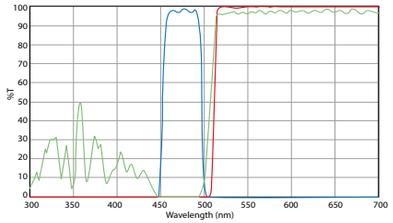

- *DI.9745 Blue excitation*
  EX 460-495 DM 505 EM 510 long pass

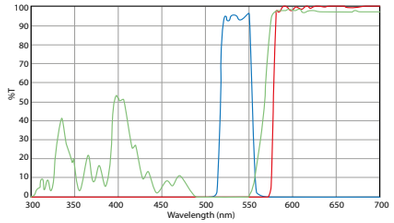

- *DI.9746 Green excitation*
  EX 510-550 DM 570 EM 575 long pass

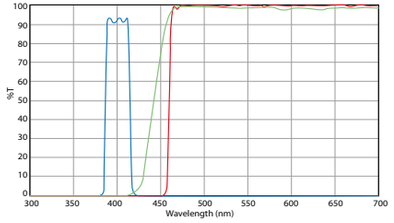

- *DI.9747 Violet excitation*
  EX 400-410 DM 455 EM 460 Long pass

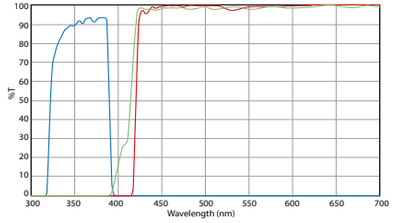

- *DI.9748 Ultra violet excitation*
  EX 330-385 DM 410 EM 420 Long pass

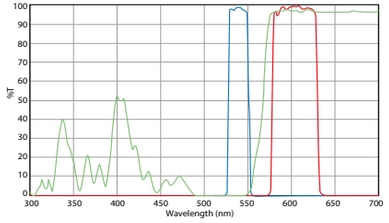

- *DI.9750.TRITC Green excitation*
  EX 528-553 DM 565 EM 578-633 band pass

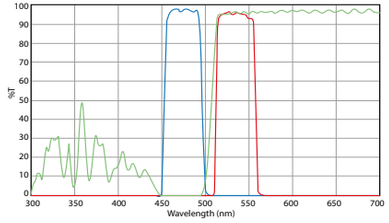

- *DI.9750.FITC Blue excitation*
  EX 460-495 DM 505 EM 510-550 band pass

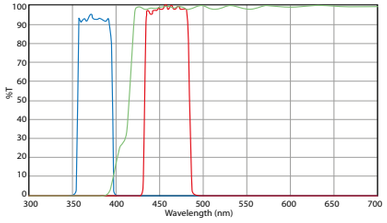

- *DI.9750.DAPI UV excitation*
  EX 360-390 DM 415 EM 435-485 band pass

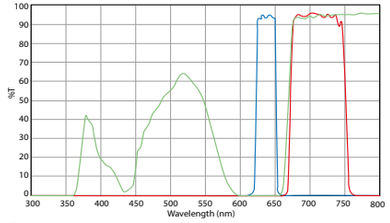

- *DI.9750.R Red excitation*
  EX 620-650 DM 660 EM 670-750 band pass

FOCUSING ADJUSTMENT

Coaxial 10 mm coarse and fine adjustments, 1 µm precision and with friction adjustment

ILLUMINATION

Fluorescence illumination with a 100 W mercury vapor lamp with external 100-240 V power supply. Transmitted 5 W LED or 100 W halogen illumination and internal power supply. Fuse holder 3.15 A / 250 V

PACKAGE CONTENT

Supplied with metal insert for Ø 38 mm cell culture dish and a metal insert for Ø 54 mm cell culture dish with 76 x 26 mm slides, metal insert for Multiwell plates, metal insert for Teraski plates, blue and green interference Ø 45 mm filters, power cord, dust cover, green filter and alignment telescope and user manual

MODELS	10x/20x/40x PLPHFi objectives	100 W Halogen illumination	5 W LED illumination	100 W HBO fluorescence illumination
DI.3053-PLPHFi	•		•	•
DI.3053-PLPHFi/HAL	•	•		•

- *6-Position fluorescence filter set wheel and 1.5 lens changer*

ACCESSORIES AND SPARE PARTS

EYEPIECES

DI.6010	Super wide field SWF 10x/25 mm eyepiece
DI.6010-C	Super wide field SWF 10x/25 mm eyepiece with crosshairs
DI.6010-M	Super wide field SWF 10x/25 mm eyepiece with micrometer
DI.6010-CM	Super wide field SWF 10x/25 mm eyepiece with micrometer and crosshairs
DI.6010-SG	Super wide field SWF 10x/25 mm eyepiece with 20 x 20 square grid reticle
DI.6012	Wide field WF 12.5x/17.5 mm eyepiece
DI.6015	Wide field WF 15x/16 mm eyepiece
DI.6020	Wide field WF 20x/12 mm eyepiece
DI.6099-L	Eyecups for eyepiece

OBJECTIVES

DI.8604	Infinity Plan Semi-Apochromatic Fluarex PLPFi-Apo 4x/0.13 IOS objective, working distance 17 mm. Recommended for fluorescence. M25 mounting thread
DI.8610	Infinity Plan Semi-Apochromatic Fluarex PLPFi-Apo 10x/0.30 IOS objective, working distance 7.4 mm. Cover glass correction 1.2 mm. Recommended for DIC and fluorescence. M25 mounting thread
DI.8620	Infinity Plan Semi-Apochromatic Fluarex PLPFi-Apo 20x/0.45 IOS objective, working distance 8 mm. Cover glass correction 1.2 mm. Recommended for DIC and fluorescence. M25 mounting thread

DI.8640 Infinity Plan Semi-Apochromatic Fluarex PLPFi-Apo 40x/0.60 IOS objective, working distance 3.3 mm. Cover glass correction 1.2 mm. Recommended for DIC and fluorescence. M25 mounting thread

DI.8660 Infinity Plan Semi-Apochromatic Fluarex PLPFi-Apo 60x/0.70 IOS objective, with collar ring for adjustment of working distance 01 - 1.3 mm. Recommended for fluorescence. M25 mounting thread

DI.8710 Infinity semi-apochromatic long working distance plan phase Fluarex PLPHFi 10x/0.30, IOS objective PLPHi 10x/0.30 objective. WD 10.2 mm

DI.8720 Infinity semi-apochromatic long working distance plan phase Fluarex PLPHFi 20x/0.45 objective. WD 7.5 to 8.8 mm

DI.8740 Infinity semi-apochromatic long working distance plan phase Fluarex PLPHFi S40x/0.60 IOS objective. WD 3 to 4.4 mm

WD = working distance

DIFFERENTIAL INTERFERENCE CONTRAST

DI.9690-00 DIC prism with polarizer for condenser. To be used with Plan Semi-Apo 20/40x objectives

DI.9690-10 DIC prism with polarizer for condenser. To be used with Plan Semi-Apo 10x objective

DI.9693-10 DIC prism for nosepiece to be used with Semi-Apo 10x objective

DI.9693-20 DIC prism for nosepiece to be used with Semi-Apo 20x objective

DI.9693-40 DIC prism for nosepiece to be used with Semi-Apo 40x objective

DI.9698 DIC analyzer for nosepiece

STANDARD GENERAL PURPOSE FLUORESCENCE FILTER SETS

Long pass type:

DI.9745 Fluorescence filter block for blue excitation with excitation at 460 to 495 nm, dichroic mirror at 505 nm and emission long pass filter from 510 nm

DI.9746 Fluorescence filter block for green excitation with excitation at 510 to 550 nm, dichroic mirror at 570 nm and emission long pass filter from 575 nm

DI.9747 Fluorescence filter block for violet excitation with excitation at 400 to 410 nm, dichroic mirror at 455 nm and emission long pass filter from 460 nm

DI.9748 Fluorescence filter block for ultra violet excitation with excitation at 330 to 385 nm, dichroic mirror at 410 nm and emission long pass filter from 420 nm

DI.9749 Empty cube for Delphi-X Inverso Fluorescence attachment

Band-pass type

DI.9750.TRITC

Fluorescence filter block for blue excitation with excitation at 528 to 553 nm, dichroic mirror at 565 nm and emission band pass filter at 578 to 633 nm. Suitable for TRTIC

DI.9750.FITC

Fluorescence filter block for green excitation with excitation at 460 to 495 nm, dichroic mirror at 505 nm and emission band pass filter at 510 to 550 nm. Suitable for FITC

DI.9750.DAPI

Fluorescence filter block for ultraviolet excitation with excitation at 360 to 390 nm, dichroic mirror at 415 nm and emission band pass filter at 435 to 485 nm. Suitable for DAPI

DI.9750.RED

Fluorescence filter block for red excitation with excitation at 620 to 650 nm, dichroic mirror at 660 nm and emission band pass filter at 670 to 750 nm

CAMERA ACCESSORIES

DI.9810 C-mount with 1x magnification for C-mount camera

DI.9840 C-mount with high resolution 0.40x objective for 1/3 inch C-mount camera

DI.9850 C-mount with high resolution relay 0.50x objective for 1/2 inch C-mount camera

MISCELLANEOUS

DI.9961 100 Watt 12 V halogen bulb

DI.9997 5 Watt LED replacement

AE.5214 500 mA 250 V fuses for LED models, 10pcs

AE.5216 5 A 250 V fuses for halogen models, 10pcs

SL.1385 100 W HBO mercury vapor lamp for fluorescence

DISPOSABLES

PB.5155 Microscope slides 76 x 26 mm, ground edges, 50 pieces per pack

PB.5157-W Microscope slides 76 x 26 mm, ground edges and frosted side white color, 50 pieces per pack

PB.5157-B Microscope slides 76 x 26 mm, ground edges and frosted side blue color, 50 pieces per pack

PB.5165 Cover glasses 18 x 18 mm, 0.13-0.17 mm, 100 pieces

PB.5168 Cover glasses 22 x 22 mm, 0.13-0.17 mm, 100 pieces

PB.5245 Lens cleaning paper, 100 sheets per pack

PB.5255 Immersion oil, 25 ml. Refraction index n = 1.515

PB.5274 Isopropyl alcohol 99%, 200 ml

PB.5275 Cleaning kit: lens fluid, lint free lens tissue/paper, brush, air blower, cotton swabs

DIMENSIONS

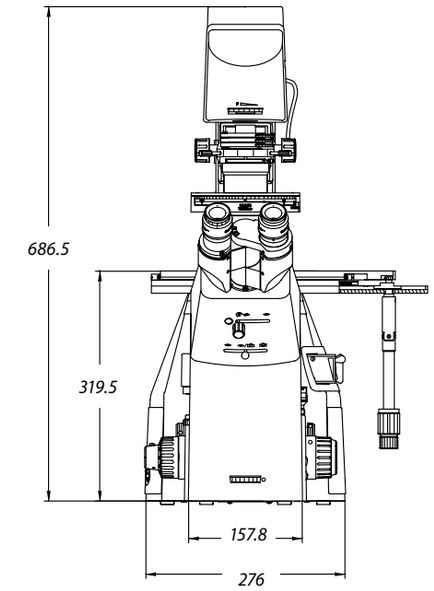

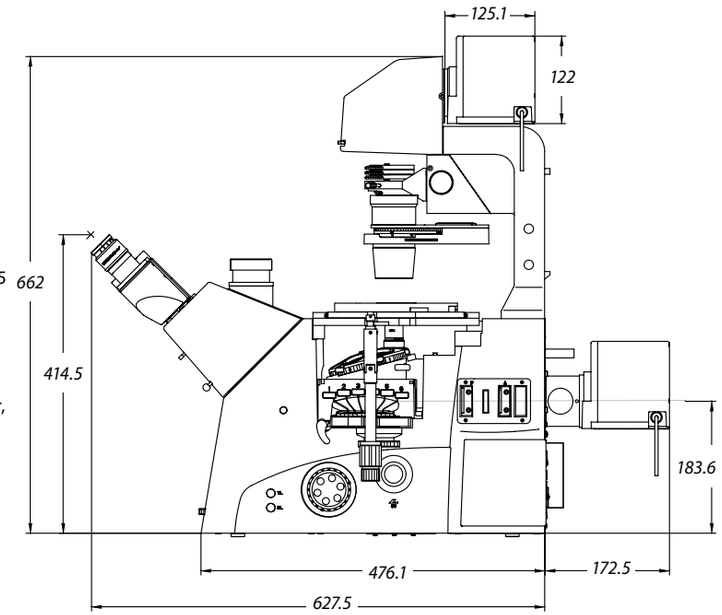

5 LIFE SCIENCE FLUORESCENCE MICROSCOPES

Oxion inverso

OX.2453-PLPHF

Oxion Inverso
fluorescence

The Oxion Inverso inverted microscopes for fluorescence are useful for observation of living organisms and tissue cultures in cell culture dishes and flasks

The Oxion Inverso models for fluorescence are available with brightfield and phase contrast. Dedicated objectives are suitable for 1.2 mm thick glass bottoms of cell culture dishes and flasks

product information

Trino | Incident | Transmitted | Infinity | LED | FluoLED | HG-HBO | Phase | 100-240V | Warranty

OXION FLUORESCENCE OX.2453-PLPHF
488 (h) x 230.5 (w) x 728 mm (d) | 14.3 kg

OX.2253-PLPHF

HIGHLIGHTS

- Life science applications
- Observation of tissue cultures, living cells
- Brightfield and phase contrast fluorescence
- Long working distance IOS plan achromatic objectives
- Revolving quintuple nosepiece
- 5 W LED transmitted illumination
- 100 W mercury vapor lamp for fluorescence
- 10 Years warranty

SPECIFICATIONS

EYEPIECES
Pair of HWF plan 10x/22 mm eyepieces

HEAD
Trinocular 45° inclined tubes with extended low and high positions for eyepieces. One diopter adjustment on left eyepiece. Interpupillary distance of 54 to 75 mm. Trinocular head with 0-100 % beamsplitter

NOSEPIECE
Revolving quintuple nosepiece on ball-bearings

OBJECTIVES FOR BRIGHTFIELD AND FLUORESCENCE MICROSCOPY
(models OX.2253-PLF and OX.2453-PLF)
Infinity color corrected long working distance plan Fluarex 10x/0.30, 20x/0.45, 40x/0.65 IOS objectives. An optional plan Fluarex 60x/0.75 IOS objective is also available

OBJECTIVES FOR PHASE CONTRAST AND FLUORESCENCE MICROSCOPY
(models OX.2253-PLPHF and OX.2453-PLPHF)
Infinity color corrected long working distance plan Fluarex 10x/0.30 and plan phase Fluarex 20x/0.45 and S40x/0.65 IOS objectives

All objectives corrected for 1.2 mm thickness.
All optics are anti-fungus treated and anti-reflection coated for maximum light throughput

ICSI SET
Micromanipulator with two 3D hydraulic joysticks for Intracytoplasmic sperm injection is available for the Oxion Inverso fluorescence. See chapter 4

STAGE

Stage 250 x 230 mm equipped with a coaxial mechanical 120 x 78 mm X-Y stage, supplied with:

- Stage extension plate
- Metal insert for Ø 65 mm cell culture dish or Multiwell
- Metal insert for 76 x 26 mm slides and 54 mm cell dish (only for models with X-Y stage)
- Glass insert with Ø 30 mm hole
- Optional universal cell culture holder

● *Accessories supplied with models with mechanical stage*

CONDENSER

N.A. 0.30 condenser with iris diaphragm.
Working distance 72 mm

The models for the phase contrast OX.2253-PLPHF and OX.2453-PLPHF are supplied with a slider with 4x/10x and 20x/40x pre-centered phase rings

FOCUSING ADJUSTMENT

Coaxial 25 mm coarse and fine adjustments, 2 µm precision and with friction adjustment

ILLUMINATION

Transmitted 5 W LED Intensity adjustable with internal 100-240 V power supply. Fuse holder 3.15 A / 250 V

The fluorescence models are equipped with a reflected 100 W HBO mercury vapor light source with external 100-240 V power supply, fuse holder 3.15 A / 250 V, UV protection shield

FILTERS FOR PHASE CONTRAST MODELS

Interference filter 550 nm green and blue filter, Ø 45 mm

STANDARD FLUORESCENCE FILTERS

(for fluorescence models)

The fluorescence models OX.2253-PLF and OX.2253-PLPHF are come with two filter sets for excitation:

- In the blue spectrum,
  OX.9745, EX465-495 (BP) DM505 (LP) EM515-555 (BP)
- In the green spectrum,
  OX.9746, EX540-580 (BP) DM600 (LP) EM605-665 (BP)

The fluorescence models OX.2453-PLF and OX.2453-PLPHF equipped with a 4-positions filter rail are supplied with three standard filter sets for excitation:

- In the blue spectrum,
  OX.9745, EX465-495 (BP) DM505 (LP) EM515-555 (BP)
- In the green spectrum,
  OX.9746, EX540-580 (BP) DM600(LP) EM605-665 (BP)
- In the UV spectrum,
  OX.9747, EX361-389 (BP) DM415 (LP) EM435-485 (BP)

On special request, the microscope can also be supplied with optimized and zero-pixel shift optimized filter sets on request. See end of this chapter

PACKAGE CONTENT

Supplied with metal insert with Ø 25 mm hole, metal insert for Ø 35 mm cell culture dish, blue LBD and green 550 nm interference Ø 45 mm filter, power cord, dust cover and user manual. Phase contrast models are supplied with 4x/10x and 20x/40x phase contrast annuli in slider, green filter and alignment telescope

● *Standard accessory*

MODELS	LWD Plan Fluarex 10x/ 20x/40x objectives	LWD Plan Fluarex 10x and plan phase Fluarex 20x/40x objectives	2-position filter block	4-position filter block	Mechanical stage
OX.2253-PLF	•		•		•
OX.2453-PLF	•			•	•
OX.2253-PLPHF		•	•		•
OX.2453-PLPHF		•		•	•

Fluarex™ objectives are made of low-absorption glass for fluorescence applications
Fluarex™ is a trademark of Euromex microscopen bv
LWD = long working distance

ACCESSORIES AND SPARE PARTS

EYEPIECES

OX.6010 HWF 10x/22 mm eyepiece
OX.6015 HWF 15x/16 mm eyepiece
OX.6110 HWF 10x/22 mm eyepiece with micrometer reticule
OX.6099 Pair of eyecups

PLAN FLUAREX OBJECTIVES FOR BRIGHTFIELD AND FLUORESCENCE [1]

OX.8604 PL FL LWD 4x/0.13 IOS objective, WD 18.95 mm
OX.8610 PL FL LWD 10x/0.30 IOS objective, WD 7.27 mm
OX.8620 PL FL LWD 20x/0.45 IOS objective, WD 6.03 mm
OX.8640 PL FL LWD 40x/0.65 IOS objective, WD 1.79 mm
OX.8660 PL FL LWD 60x/0.75 IOS objective, WD 1.28 mm

OBJECTIVES FOR FLUORESCENCE AND PHASE CONTRAST [1] [2] [3]

OX.8720 Plan Phase Fluarex LWD 20x/0.45 infinity corrected IOS objective. WD 6.12 mm
OX.8740 Plan Phase Fluarex LWD 40x/0.65 infinity corrected IOS objective. WD 1.79 mm

[1] *All objectives corrected for 1 mm cover glass thickness except OX.8304*
[2] *Phase contrast objectives require slider with phase contrast annuli OX.9163*
[3] *Phase contrast objectives require slider with phase contrast annuli OX.9163*

All optical parts are anti-fungus treated
WD = working distance

STANDARD GENERAL PURPOSE FLUORESCENCE FILTER SETS:

OX.9745 Fluorescence filter block for blue excitation 465-495 nm
OX.9746 Fluorescence filter block for green excitation 540-580 nm
OX.9747 Fluorescence filter block for ultra violet excitation 361-389 nm
OX.9748 Fluorescence filter block for violet excitation 415-445 nm

PHASE CONTRAST ATTACHMENTS

OX.9148 Telescope for phase contrast fluorescence alignment
OX.9149 Telescope for phase contrast alignment
OX.9190 Slider with 4x/10x and 20x/40x phase contrast annuli

CAMERA ACCESSORIES

OX.9810 C mount with 1.0x objective
OX.9833 C-mount adapter with 0.33x objective for Oxion microscopes and 1/3" cameras
OX.9850 C-mount adapter with 0.5x objective for Oxion and Oxion Inverso microscopes and 1/2" cameras
AE.5120-2 Trinocular 23.2 mm tube for Oxion photo port revision-2
AE.5130 Universal SLR camera adapter with 2x projection lens for 23.2 mm tubes. Needs T2 adapter and AE.5120 or AE.5120-2

5 LIFE SCIENCE FLUORESCENCE MICROSCOPES

AE.5025 T2 adapter for Nikon D digital SLR cameras
AE.5040 T2 adapter for Canon EOS digital SLR cameras

STAGES AND HOLDERS

OX.9500 Mechanical coaxial X-Y 120 x 78 mm stage
OX.9506 Transparent glass insert with Ø 30 mm hole
OX.9508 Metal insert with Ø 25 mm hole
OX.9510 Metallic insert for Ø 65 mm cell culture dish and Multiwell
OX.9512 Metal insert with 76 x 26 mm slide holder and Ø 55 mm cell culture dish holder
OX.9535 Metal insert for Ø 35 mm cell culture dish holder
OX.9550 Stage extension plate
OX.9599 Universal cell culture dish holder
AE.8010 Heating stage with transparent glass plate for AE.8000 Micromanipulator, including digital temperature controller

● *OX.9599*

MICROMANIPULATOR ATTACHMENT

AE.8000 Micromanipulator for intracytoplasmic sperm injection (ICSI) suitable for the Oxion Inverso inverted microscope

MISCELLANEOUS

OX.9700 Blue filter Ø 45 mm
OX.9985 5 W NeoLED™ replacement unit
AE.3199 Glass fuses 3.15 A 250 V packed, per 10 pieces
SL.1385 100 W HBO mercury vapor lamp for fluorescence
OX.9703 IR cut-off filter
OX.9749 Empty filter block
OX.9753 Filter block rail, three positions, without filters
OX.9754 Filter block rail, four positions, without filters

DISPOSABLES

PB.5155 Microscope slides 76 x 26 mm, ground edges, 50 pieces
PB.5165 Cover glasses 18 x 18 mm, thickness 0.13 - 0.17 mm, 100 pieces
PB.5168 Cover glasses 22 x 22 mm, thickness 0.13 - 0.17 mm, 100 pieces
PB.5245 Lens cleaning paper, 100 sheets per pack
PB.5255 Immersion oil, n = 1.482 (25 ml)
PB.5274 Isopropyl alcohol 99% (200 ml)
PB.5275 Cleaning kit: lens cleaning fluid, lint free lens tissue, brush, air blower, cotton swabs

● *Accessories supplied with phase contrast models*

DIMENSIONS

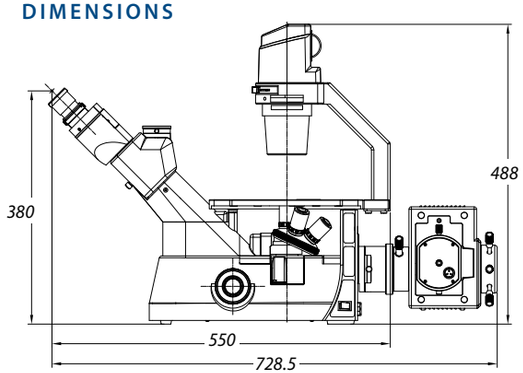

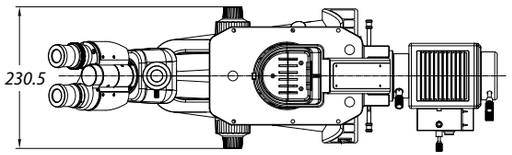

STANDARD GENERAL PURPOSE FLUORESCENCE FILTER SETS

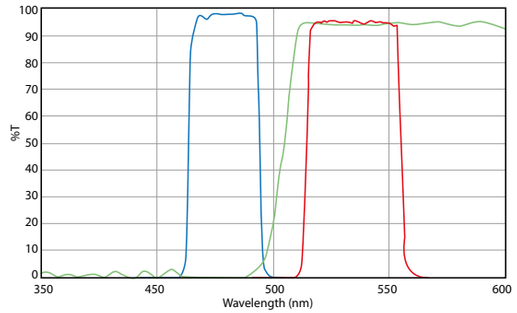

● **OX.9745 Blue excitation 465-495 nm**
FITC EX465-495 (BP) DM505 (LP) EM515-555 (BP)

Also suitable for: Acridine Orange + DNA, Alexa Fluor 488™, Atto 488, Azami Green, BODIPY FL/pH7.2, Calcein, Calcium Green™-1, Cy2™, DiO, DyLight 488, EGFP, Emerald GFP, FAM, FITC, Fluo-4, GFP LysoTracker Green/pH 5.2, MitoTracker Green FM/MeOH, mWasabi, Oregon Green™ 488, SYBR® Green I, SYTO 9/DNA, ZsGreen

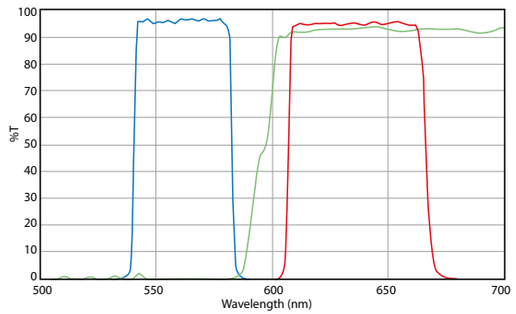

● **OX.9746 Green excitation 540-580 nm**
Texas Red / mCherry / Alexa Fluor 594
EX540-580 (BP) DM600 (LP) EM605-665 (BP)

Also suitable for: Alexa Fluor 568™, Alexa Fluor 594™, CAL Fluor® Red 610, Cy3.5™, DyLight 594, FusionRed, Killer Red, mCherry, MitoTracker Red/MeOH, mKate2, mRFP1, ReAsH-CCPGCC, Rhodamine Red™-X, ROX, Sulforhodamine 101, Texas Red®, Texas Red®-X, X-rhod-1/Ca2+

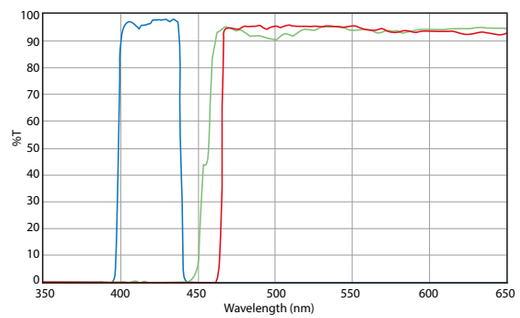

● **OX.9747 Ultra-Violet excitation 361-381 nm**
DAPI / Hoechst / Alexa Fluor 350
350 EX361-389 (BP) D415 (LP) EM435-485 (BP)

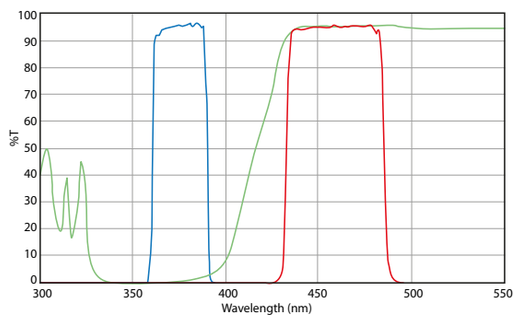

● **OX.9748 Violet excitation 415-445 nm**
UV/DAPI/Hoechst/AlexaFluor 350
EX415-445 (BP) DM455 (LP) EM465-495 (BP)

Also suitable for: Alexa Fluor 350™, Biosearch Blue, Coumarin, DAPI, DyLight 350, Hoechst 33258, LysoTracker Blue/MeOH

The fluorescence microscopes can be equipped with more specific, optimized and application related fluorescence filter sets, see accessories section and/or separate fluorescence filter catalog

FluoLED

LE.6500

LED light sources

for fluorescence

Euromex offers two high-end and extremely easy-to-use LED light sources for fluorescence applications that can replace mercury vapor HBO light sources of our microscope solutions for fluorescence

The standard LE.6500 LED light source for fluorescence fits five wavelengths bands for fluorescence excitation, one for ultra violet, two for the green and two for the blue light spectrum. Other bands are also possible, see model block

HIGHLIGHTS

- **Stand-alone operation**
- **Easy mounting and operation**
- **9 excitation wavelengths-bands are available**
- **2 Years warranty**

The ultimate LED light source for fluorescence LE.6900 fits all nine available wavelength bands for fluorescence, ranging from
330 to 670 nm

product information

FluoLED | 100-240V | Warranty

LAMPHOUSE	95 (h) x 85 (w) x 130 (d) | 1.30 kg
CONTROLLER	75 (h) x 150 (w) x 205 (d) | 0.90 kg
TOUCH SCREEN	95 (h) x 155 (w) x 36 (d) | 0.25 kg

SPECIFICATIONS

LAMPHOUSE

The lamphouse can be mounted with a specific adapter on a Euromex Delphi-X Observer, iScope and Oxion upright microscopes as well as for our Oxion Inverso and Delphi-X Inverso inverted models. For other brands, contact Euromex

CONTROLLERS

The standard LE.6500 system has a 100-240 V power supply/ intensity control unit with touch screen for selection and intensity adjustment of five wavelength bands

The ultimate LE.6900 system has a 100-240 V power supply/ intensity control unit with keyboard pad for selection and intensity adjustment of all nine wavelength bands

Keyboard pad of the LE.6900

LE.6500

Band	Wavelength	FWHM (nm)	Range	Color	Power (mW)
1	365	18	330-380	Ultra violet	205
4	450	26	440-470	Royal blue	485
5	470	24	450-490	Blue	315
6	525	29	505-545	Green	142
7	545	116	510-560	Emerald green	172

Customized versions (product nr. LE.6500-ABCDE) with a maximum of five wavelength bands are available on special request. One can choose from wavelength bands 1 to 7 (see table below), e.g. LE.6500-12456

Customized versions (product nr. LE.6500-ABCD) with wavelength band 8 or 9 (not both) plus three other wavelength bands (chosen freely from wavelength bands 1 to 7, see table below) are also available. E.g LE.6500-1458

LE.6900

Band	Wavelength	FWHM (nm)	Range	Color	Power (mW)	E.g. compatible fluorochromes
1	365	18	330-380	Ultra violet	205	DAPI (359 nm), Biosearch Blue (352 nm), Calcofluor White (350 nm)
2	385	14	370-395	Royal violet	126	Coumarin (384 nm), FluoroGold (390 nm), wtGFP (395 nm)
3	405	22	380-420	Violet	468	DyLight 405 (399 nm)
4	450	26	440-470	Royal blue	485	Auramine (460 nm)
5	470	24	450-490	Blue	315	Cy2 (489 nm), rsGFP (488 nm), EGFP (488 nm), FITC (494 nm), Acridine Orange (DNA -500 nm)
6	525	29	505-545	Green	142	Citrine (514 nm), Acridine Orange (500 nm)
7	545	16	510-560	Emerald green	172	TRITC (555 nm), Cy3 (552 nm), DsRed (557 nm), Alexa Fluor 546 (556 nm)
8	625	20	605-650	Orange-Red	130	Cy5 (649nm), Alexa Fluor 633 (632 nm)
9	660	21	645-670	Red	221	Cy5 (649nm), Alexa Fluor 647 (649 nm)

FLUORESCENCE FILTER SETS

For ordering a specific fluorescence filter set find the fluorochrome you need and add the filter set reference 'xxxx' as follows:

FOR ISCOPE:

IS.9750.xxxx/6, iScope® with 6-position fluorescence attachment, needs also empty block IS.9749/6

IS.9750.xxxx/3 iScope® with 3-position fluorescence attachment, needs also empty block IS.9749/3

FOR DZ SERIES:

DZ.9750.xxxx, this set is supplied with two emission filters and also needs empty block DZ.9749

EXAMPLE:
the reference for the iScope®
with a 39001 filter set is IS.9750.39001

OPTIMIZED FILTER SETS

19xxx series is an optimized filter set with long pass filter

39xxx series is a standard optimized filter set

49xxx series is a zero-pixel shift optimized filter set

Acridine Orange DNA - EX: 500 nm EM: 526 nm
EX: 465-495 nm DM 505 nm EM: 515 nm (LP) • **19002**
EX: 465-495 nm DM 505 nm EM: 590-650 nm • **39009**
EX: 460-500 nm DM 510 nm EM: 510-560 nm • **49011**

Acridine Orange DNA+RNA - EX: 500 nm EM: 526 nm
EX: 460-500 nm DM 510 nm EM: 510 nm (LP) • **49011**

Alexa Fluor 488™ - EX: 498 nm EM: 520 nm
EX: 460-500 nm DM 510 nm EM: 510-560 nm • **49011**

Alexa Fluor 514™ - EX: 517 nm EM: 539 nm
EX: 485-505 nm DM 515 nm EM: 525-555 nm • **39003**
EX: 490-510 nm DM 515 nm EM: 520-550 nm • **49003**

Alexa Fluor 546™ - EX: 556 nm EM: 573 nm
EX: 528-553 nm DM 565 nm EM: 578-633 nm • **39004**
EX: 532-557 nm DM 605 nm EM: 570-640 nm • **49004**

FOR DELPHI-X OBSERVER/INVERSO:

DX.9750.xxxx, Delphi-X Observer™ with 6-position fluorescence attachment, needs also empty block DX.9749/6

DI.9750.xxxx, Delphi-X Inverso™ with 6-position fluorescence attachment, needs also empty block DI.9749/6

FOR OXION SERIES:

OX.9750.xxxx Oxion inverso with 3-position fluorescence attachment, needs also empty block OX.9749/3

OX.9750.xxxx Oxion inverso with 4-positions fluorescence attachment, needs also empty block OX.9749/4

AE.3250.xxxx, Oxion upright with 4-positions fluorescence attachment, needs also empty block AE.3249

AE.3248

Alexa Fluor 555™ - EX: 553 nm EM: 568 nm
EX: 528-553 nm DM 565 nm EM: 578-633 nm • **39004**
EX: 532-557 nm DM 605 nm EM: 570-640 nm • **49004**

Alexa Fluor 568™ - EX: 578 nm EM: 603 nm
EX: 540-580 nm DM 600 nm EM: 615-665 nm • **39010**
EX:540-580 nm DM 585 nm EM: 593-667 nm • **49008**

Alexa Fluor 594™ - EX: 590 nm EM: 617 nm
EX: 540-580 nm DM 600 nm EM: 615-665 nm • **39010**

Alexa Fluor 647™ - EX: 649 nm EM: 666 nm
EX: 595-645 nm DM 655 nm EM: 665-715 nm • **39007**
EX: 590-650 nm DM 660 nm EM: 663-737 nm • **49006**
EX: 625-655 nm DM 660 nm EM: 665-715 nm • **49009**

AmCyan - EX: - 458 nm EM: 489 nm
EX: 425-445 nm DM 455 nm EM: 465-495 nm • **39001**

Auramine longpass - EX: 460 nm EM: 550 nm
EX: 425-475 nm DM 485 nm EM: 495 nm (LP) • **19008**

Auramine-rhodamine - EX: **450 nm EM: 550 nm**
EX: 465-495 nm DM 485 nm EM: 515 nm (LP) • **19002**

Azami Green - EX: 492 nm EM: 505 nm
EX: 465-495 nm DM 505 nm EM: 515-555 nm • **39002**
EX: 450-490 nm DM 525 nm EM: 500-550 nm • **49002**

Biosearch Blue - E**X: 352 nm EM: 447 nm**
EX: 361-389 nm DM 415 nm EM: 435-485 nm • **39000**

BODIPY FL/pH7.2 - EX: **505 nm EM: 512 nm**
EX: 465-495 nm DM 505 nm EM: 515-555 nm • **39002**
EX: 450-490 nm DM 525 nm EM: 500-550 nm • **49002**

CAL Fluor® Red 590 - EX: 569 nm EM: 591 nm
EX: 528-553 nm DM 565 nm EM: 578-633 nm • **39004**
EX: 532-557 nm DM 605 nm EM: 570-640 nm • **49004**

CAL Fluor® Red 610 - EX: 590 nm EM: 610 nm
EX: 540-580 nm DM 600 nm EM: 615-665 nm • **39010**

Calcein - EX: **494 nm EM: 517 nm**
EX: 465-495 nm DM 505 nm EM: 515-555 nm • **39002**
EX: 450-490 nm DM 525 nm EM: 500-550 nm • **49002**
EX: 460-500 nm DM 510 nm EM: 510-560 nm • **49011**

Calcium Green™-1 - EX: 506 nm EM: 531 nm
EX: 465-495 nm DM 505 nm EM: 515-555 nm • **39002**
EX: 450-490 nm DM 525 nm EM: 500-550 nm • **49002**
EX: 460-500 nm DM 510 nm EM: 510-560 nm • **49011**

Calcofluor White - EX: 350 nm EM: 475 nm
EX: 361-389 nm DM: 415 nm EM: 435 nm (LP) • **19000**

Cerulean - EX: **433 nm EM: 475 nm**
EX: 425-445 nm DM 455 nm EM: 465-495 nm • **39001**

CFP - EX: 433 nm EM: 475 nm
EX: 425-445 nm DM 455 nm EM: 465-495 nm • **39001**

Citrine - EX: **514 nm EM: 529 nm**
EX: 485-505 nm DM 515 nm EM: 525-555 nm • **39003**
EX: 490-510 nm DM 515 nm EM: 520-550 nm • **49003**

Coumarin - EX: **384 nm EM: 470 nm**
EX: 390-420 nm DM: 440 nm EM: 450 nm (LP) • **19011**

Cy2™ - EX: 4**89 nm EM: 506 nm**
EX: 465-495 nm DM 505 nm EM: 515-555 nm • **39002**
EX: 450-490 nm DM 525 nm EM: 500-550 nm • **49002**
EX: 460-500 nm DM 510 nm EM: 510-560 nm • **49011**

Cy3.5™ - EX: **581 nm EM: 598 nm**
EX: 540-580 nm DM 600 nm EM: 615-665 nm • **39010**
EX:540-580 nm DM 585 nm EM: 593-667 nm • **49008**

Cy3™ - EX: 552 nm EM: 570 nm
EX: 528-553 nm DM 565 nm EM: 578-633 nm • **39004**
EX: 532-557 nm DM 605 nm EM: 570-640 nm • **49004**

Cy5™ - EX: **649 nm EM: 670 nm**
EX: 595-645 nm DM 655 nm EM: 665-715 nm • **39007**
EX: 590-650 nm DM 660 nm EM: 663-737 nm • **49006**
EX: 625-655 nm DM 660 nm EM: 665-715 nm • **49009**

Cy7™ - EX: 743 **nm EM: 767 nm**
EX: 672-747 nm DM 760 nm EM: 765-855 nm • **49007**

DAPI - EX: **359 nm EM: 461 nm**
EX: 361-389 nm DM 415 nm EM: 435-485 nm • **39000**

Draq5 - EX: **647 nm EM: 683 nm**
EX: 595-645 nm DM 655 nm EM: 665-715 nm • **39007**

DsRed - EX: 557 nm EM: 584 nm
EX: 528-553 nm DM 565 nm EM: 578-633 nm • **39004**
EX: 532-557 nm DM 605 nm EM: 570-640 nm • **49004**

DyLight 350 - EX: 352 nm EM: 435 nm
EX: 361-389 nm DM 415 nm EM: 435-485 nm • **39000**

DyLight 405 - **EX: 399 nm EM: 433 nm**
EX: 390-420 nm DM: 440 nm EM: 450 nm (LP) • **19011**

DyLight 488 - EX: 492 nm EM: 517 nm
EX: 450-495 nm DM 505 nm EM: 515-555 nm • **39002**
EX: 450-490 nm DM 525 nm EM: 500-550 nm • **49002**
EX: 460-500 nm DM 510 nm EM: 510-560 nm • **49011**

DyLight 549 - **EX: 554 nm EM: 569 nm**
EX: 528-553 nm DM 565 nm EM: 578-633 nm • **39004**
EX: 532-557 nm DM 605 nm EM: 570-640 nm • **49004**

DyLight 594 - EX: 592 nm EM: 616 nm
EX: 540-580 nm DM 600 nm EM: 615-665 nm • **39010**
EX:540-580 nm DM 585 nm EM: 593-667 nm • **49008**

DyLight 649 - EX: 652 nm EM: 667 nm
EX: 595-645 nm DM 655 nm EM: 665-715 nm • **39007**
EX: 590-650 nm DM 660 nm EM: 663-737 nm • **49006**
EX: 625-655 nm DM 660 nm EM: 665-715 nm • **49009**

DyLight 750 - EX: 751 nm EM: 772 nm
EX: 672-747 nm DM 760 nm EM: 765-855 nm • **49007**

ECFP - EX: **434 nm EM: 477 nm**
EX: 425-445 nm DM 455 nm EM: 465-495 nm • **39001**

5 LIFE SCIENCE FLUORESCENCE MICROSCOPES

FLUORESCENCE FILTER SETS (continued)

EGFP - EX: 488 nm EM: 507 nm
EX: 465-495 nm DM 505 nm EM: 515-555 nm • **39002**
EX: 450-490 nm DM 525 nm EM: 500-550 nm • **49002**

Emerald GFP - EX: 489 nm EM: 510 nm
EX: 465-495 nm DM 505 nm EM: 515-555 nm • **39002**
EX: 450-490 nm DM 525 nm EM: 500-550 nm • **49002**

EYFP/pH 7 - EX: 514 nm EM: 527 nm
EX: 485-505 nm DM 515 nm EM: 525-555 nm • **39003**
EX: 490-510 nm DM 515 nm EM: 520-550 nm • **49003**

FITC - EX: **490 nm EM: 525 nm**
EX: 465-495 nm DM 505 nm EM: 515-555 nm • **39002**
EX: 450-490 nm DM 525 nm EM: 500-550 nm • **49002**
EX: 460-500 nm DM 510 nm EM: 510-560 nm • **49011**

Fluo-4 - EX: **494 nm EM: 516 nm**
EX: 465-495 nm DM 505 nm EM: 515-555 nm • **39002**
EX: 450-490 nm DM 525 nm EM: 500-550 nm • **49002**
EX: 460-500 nm DM 510 nm EM: 510-560 nm • **49011**

FluoroGold - EX: **390 nm EM: 600 nm**
EX: 361-389 nm DM: 415 nm EM: 515 nm (LP) • **19012**

FM™ 1-43 - EX: 479 nm EM: 598 nm
EX: 465-495 nm DM: 505 nm EM: 600 nm (LP) • **19010**

FM™ 4-64 - EX: 51**5 nm EM: 740 nm**
EX: 540-580 nm DM: 600 nm EM: 610 nm (LP) • **19006**

FM™ 4-64 - E**X: 515 nm EM: 740 nm**
EX: 465-495 nm DM: 505 nm EM: 600 nm (LP) • **19010**

FusionRed - EX: **576 nm EM: 603 nm**
EX: 540-580 nm DM 600 nm EM: 615-665 nm • **39010**
EX:540-580 nm DM 585 nm EM: 593-667 nm • **49008**

GFP - EX: **488 nm EM: 507 nm**
EX: 465-495 nm DM 505 nm EM: 515-555 nm • **39002**
EX: 450-490 nm DM 525 nm EM: 500-550 nm • **49002**

Hoechst 33258 - EX: 352 nm EM: 461 nm
EX: 361-389 nm DM 415 nm EM: 435-485 nm • **39000**

Lucifer Yellow - E**X: 428 nm EM: 540 nm**
EX: 400-440 nm DM 455 nm EM: 515-555 nm • **39008**

LysoTracker Blue/MeOH - EX: 373 nm EM: 425 nm
EX: 361-389 nm DM 415 nm EM: 435-485 nm • **39000**

LysoTracker Green/pH 5.2 - EX: 504 nm EM: 511 nm
EX: 465-495 nm DM 505 nm EM: 515-555 nm • **39002**
EX: 450-490 nm DM 525 nm EM: 500-550 nm • **49002**

LysoTracker Red/pH 5.2 - EX: 577 nm EM: 590 nm
EX:540-580 nm DM 585 nm EM: 593-667 nm • **49008**

LysoTracker Yellow HCK-123 - EX: 486 nm EM: 563 nm
EX: 465-495 nm DM 505 nm EM: 590-650 nm • **39009**

mCherry - EX: 5**87 nm EM: 610 nm**
EX: 540-580 nm DM 600 nm EM: 615-665 nm • **39010**
EX:540-580 nm DM 585 nm EM: 593-667 nm • **49008**

mCitrine - EX: 5**14 nm EM: 529 nm**
EX: 485-505 nm DM 515 nm EM: 525-555 nm • **39003**
EX: 490-510 nm DM 515 nm EM: 520-550 nm • **49003**

MitoTracker Green FM/MeOH - EX: 490 nm EM: 516 nm
EX: 465-495 nm DM 505 nm EM: 515-555 nm • **39002**
EX: 450-490 nm DM 525 nm EM: 500-550 nm • **49002**

MitoTracker Orange/MeOH - EX: 551 nm EM: 576 nm
EX: 528-553 nm DM 565 nm EM: 578-633 nm • **39004**
EX: 532-557 nm DM 605 nm EM: 570-640 nm • **49004**

MitoTracker Red/MeOH - EX: 578 nm EM: 599 nm
EX: 540-580 nm DM 600 nm EM: 615-665 nm • **39010**
EX:540-580 nm DM 585 nm EM: 593-667 nm • **49008**

MitoTracker Deep Red 633/MeOH - EX: 644 nm EM: 665 nm
EX: 590-650 nm DM 660 nm EM: 663-737 nm • **49006**
EX: 625-655 nm DM 660 nm EM: 665-715 nm • **49009**

mRFP1 - EX: 5**84 nm EM: 607 nm**
EX: 540-580 nm DM 600 nm EM: 615-665 nm • **39010**
EX:540-580 nm DM 585 nm EM: 593-667 nm • **49008**

mWasabi - EX: 4**93 nm EM: 509 nm**
EX: 465-495 nm DM 505 nm EM: 515-555 nm • **39002**
EX: 450-490 nm DM 525 nm EM: 500-550 nm • **49002**

Nile Blue - EX: 631 nm EM: 660 nm
EX: 590-650 nm DM 660 nm EM: 663-737 nm • **49006**

Oregon Green™ 488 - EX: 490 nm EM: 514 nm
EX: 465-495 nm DM 505 nm EM: 515-555 nm • **39002**
EX: 450-490 nm DM 525 nm EM: 500-550 nm • **49002**

Oregon Green™ 514 - EX: 506 nm EM: 526 nm
EX: 485-505 nm DM 515 nm EM: 525-555 nm • **39003**
EX: 490-510 nm DM 515 nm EM: 520-550 nm • **49003**

Pacific Blue - EX: 405 nm EM: 455 nm
EX: 390-420 nm DM: 440 nm EM: 450 nm (LP) • **19011**

Propidium Iodide - EX: 536 nm EM: 617 nm
EX: 528-552 nm DM 565 nm EM: 590-650 nm • **39005**
EX: 530-560 nm DM 570 nm EM: 590-650 nm • **49005**

Pulsar™ 650 - EX: 460 nm EM: 650 nm
EX: 465-495 nm DM: 505 nm EM: 600 nm (LP) • **19010**

Quasar® 670 - EX: 647 nm EM: 670 nm
EX: 595-645 nm DM 655 nm EM: 665-715 nm • **39007**

Rhod-2 - EX: **552 nm EM: 581 nm**
EX: 528-553 nm DM 565 nm EM: 578-633 nm • **39004**
EX: 532-557 nm DM 605 nm EM: 570-640 nm • **49004**

Rhodamine 123 - EX: 507 nm EM: 529 nm
EX: 485-505 nm DM 515 nm EM: 525-555 nm • **39003**
EX: 490-510 nm DM 515 nm EM: 520-550 nm • **49003**

Rhodamine Red™-X - **EX: 570 nm EM: 590 nm**
EX: 540-580 nm DM 600 nm EM: 615-665 nm • **39010**
EX:540-580 nm DM 585 nm EM: 593-667 nm • **49008**

Sulforhodamine 101 - **EX: 586 nm EM: 605 nm**
EX: 540-580 nm DM 600 nm EM: 615-665 nm • **39010**

SYBR® Green I - EX: 498 nm EM: 522 nm
EX: 465-495 nm DM 505 nm EM: 515-555 nm • **39002**
EX: 450-490 nm DM 525 nm EM: 500-550 nm • **49002**
EX: 460-500 nm DM 510 nm EM: 510-560 nm • **49011**

SYTO 9/DNA - EX: 483 nm EM: 500 nm
EX: 465-495 nm DM 505 nm EM: 515-555 nm • **39002**
EX: 450-490 nm DM 525 nm EM: 500-550 nm • **49002**
EX: 460-500 nm DM 510 nm EM: 510-560 nm • **49011**

SYTO® 60 - EX: 652 nm EM: 678 nm
EX: 595-645 nm DM 655 nm EM: 665-715 nm • **39007**
EX: 590-650 nm DM 660 nm EM: 663-737 nm • **49006**
EX: 625-655 nm DM 660 nm EM: 665-715 nm • **49009**

TagRFP - EX: **556 nm EM: 584 nm**
EX: 528-553 nm DM 565 nm EM: 578-633 nm • **39004**

TAMRA - EX: **555 nm EM: 580 nm**
EX: 528-553 nm DM 565 nm EM: 578-633 nm • **39004**
EX: 532-557 nm DM 605 nm EM: 570-640 nm • **49004**

Texas Red® - **EX: 595 nm EM: 620 nm**
EX: 540-580 nm DM 600 nm EM: 615-665 nm • **39010**
EX:540-580 nm DM 585 nm EM: 593-667 nm • **49008**

Texas Red®-X - E**X: 595 nm EM: 615 nm**
EX: 540-580 nm DM 600 nm EM: 615-665 nm • **39010**
EX:540-580 nm DM 585 nm EM: 593-667 nm • **49008**

TO-PRO™-3 - EX: **642 nm EM: 661 nm**
EX: 595-645 nm DM 655 nm EM: 665-715 nm • **39007**

Topaz - EX: **514 nm EM: 529 nm**
EX: 485-505 nm DM 515 nm EM: 525-555 nm • **39003**
EX: 490-510 nm DM 515 nm EM: 520-550 nm • **49003**

TRITC - EX: 5**55 nm EM: 580 nm**
EX: 528-553 nm DM 565 nm EM: 578-633 nm • **39004**

Turbo FP650 - EX: **592 nm EM: 650 nm**
EX: 540-580 nm DM: 600 nm EM: 610 nm (LP) • **19006**
EX:540-580 nm DM 585 nm EM: 593-667 nm • **49008**

wtGFP - EX: **475 nm EM: 509 nm**
EX: 425-475 nm DM: 485 nm EM: 495 nm (LP) • **19008**

X-rhod-1/Ca2+ - EX: 5**80 nm EM: 601 nm**
EX: 540-580 nm DM 600 nm EM: 615-665 nm • **39010**

ZsGreen1 - EX: **493 nm EM: 505 nm**
EX: 465-495 nm DM 505 nm EM: 515-555 nm • **39002**

OPTIMIZED FISH SINGLE BAND FILTERS

DAPI 395 nm FISH single band
EX: 385-407 nm DM 425 EM: 435-485 • **49028**

Blue FISH single band
EX: 400-410 nm DM 425 EM: 442-478 • **49301**

Aqua FISH single band
EX: 426-446 nm DM 425 EM: 465-495 • **49302**

Green#1 FISH single band
EX: 483-507 nm DM 515 EM: 522-551) • **49303**

Green#2 FISH single band
EX: 473-497 nm DM 515 EM: 510-540 • **49308**

Green#3 Narrow band FISH single band
EX: 480-500 nm DM 505 EM: 515-535 • **49312**

Gold FISH single band
EX: 541-551 nm DM 556 EM: 560-583 • **49304**

Orange#1 FISH single band
EX: 535-557 nm DM 565 EM: 573-606 • **49305**

Orange#2 FISH single band
EX: 529-550 nm DM 556 EM: 561-592 • **49309**

FLUORESCENCE FILTER SETS (continued)

Red#1 FISH single band
EX: 568-592 nm DM 600 EM: 595-640 • **49306**

Red#2 FISH single band
EX: 581-602 DM 610 EM: 615-645 • **49310**

Red#3 Narrow band FISH single band
EX: 592-605 nm DM 612 EM: 618-646 • **49311**

Far Red FISH single band
EX: 620-640 nm DM 647 EM: 637-697 • **49307**

Cy5 Narrow Excitation single band
EX: 625-655 nm DM 660 EM: 665-715 • **49009**

OPTIMIZED FISH DUAL BAND FILTERS

DAPI/Green FISH dual band 3 filters
EX: 380-410 / EX: 470-495, DM 424-462 / 515-560 / 610-660,
EM: 515-540 / EM: 615-645 • **59001v2**

DAPI/Orange FISH dual band 3 filters
EX: 380-405 / 530-560, DM 430-495 / 570-615,
EM: 445-475 / 570-610 • **59002v2**

DAPI/Red FISH dual band 3 filters
EX: 380-405 / EX: 565-590, DM 445-475 / 605-650
EM: 445-475 / EM: 605-645 • **59003v2**

Green/Red #1 FISH dual band 3 filters
EX: 480-500 / EX: 574-594, DM 424-462 / 510-560 / 610-660,
EM: 515-540 / EM: 615-640 • **59010**

Green/Orange #1 FISH dualband 3 filters
EX: 465-490 / EX: 550-570, DM 425-455 / 505-535 / 590-625,
EM: 425-455 / EM: 505-535) EM: 590-620 • **59011**

Green/Orange #2 FISH dualband 3 filters
EX: 460-485 / EX: 540-560, DM 500-530 / 575-620,
EM: 500-530 / EM: 575-620 • **59012**

Aqua/Gold FISH dualband 3 filters
EX: 430-445 / EX: 525-545, DM 465-495 / 565-595,
EM: 470-490 / EM: 570-590 • **59033**

OPTIMIZED FISH TRIPLE BAND FILTERS

ECFP/EYFP/mCherry triple band 3 filters
EM: 430-445 / EM: 495-510 / EM: 565-585,
DM 455-480 / 520-550 / 600-660,
EM: 460-480 / EM: 520-550 / EM: 605-660 • **69008**

DAPI/Green/Orange #1 FISH triple band 3 filters
EX: 380-405 / EX: 465-490 / EX: 550-570,
DM 425-450 / 505-535 / 590-625
EM: 425-450 / EM: 505-535 / EM: 590-620 • **69013v2**

DAPI/Green/Red FISH triple band 3 filters
EX: 380-405 / EX: 480-495 / EX: 575-590
DM 425-460 / 515-560 / 610-655
EM: 425-460 / EM: 515-560 / EM: 610-655 • **69015**

Aqua/Green/Orange FISH triple band 3 filters
EX: 425-445 / EX: 490-505 / EM: 550- 560
DM 460-475 / 520-540 / 590-630
EM: 460-475 / EM: 520-540 / EM: 595-625 • **69011**

DAPI/Aqua/Green/Orange FISH triple band 3 filters
EX: 380-390 / EX: 420-440 / EX: 555-575
DM 455-475 / 518-540 / 590-628
EM: 460-475 / EM: 518-540 / EM: 595-630 • **69014**

NEUTRAL DENSITY FILTERS:

25 mm diameter, 1 mm thick and unmounted

AE.3250.ND01 Neutral density filter, ND 0.10 (T 80 %)

32 mm diameter, 1 mm thick and unmounted

AE.3252.ND01 Neutral density filter,ND 0.10 (T80 %)
AE.3252.ND02 Neutral density filter, ND 0.20 (T 65 %)
AE.3252.ND03 Neutral density filter, ND 0.30 (T 50 %)
AE.3252.ND04 Neutral density filter, ND 0.40 (T 40 %)
AE.3252.ND05 Neutral density filter, ND 0.50 (T 32 %)
AE.3252.ND06 Neutral density filter, ND 0.60 (T 25 %
AE.3252.ND10 Neutral density filter, ND 1.0 (T 10 %)
AE.3252.ND13 Neutral density filter, ND 1.3 (T 5 %)

On request, microscopes can be equipped with more specific, optimized and application related fluorescence filter sets

about
Antoni van Leeuwenhoek

1632, Delft, the Netherlands

As a cloth merchant, Antoni van Leeuwenhoek became familiar with the use of magnifying glasses, which he used to check the quality of the fabric and the density of the weave. Eventually he began to grind and polish his own lenses. Around 1670 he developed the single microscope, which could magnify many times more than the compound microscopes of that time

VAN LEEUWENHOEK'S MICROSCOPE

The design of Van Leeuwenhoek's microscopes is relatively simple: a small glass lens riveted between two metal plates. The preparation sits on a pin that can move up and down and closer or further from the lens with screwsin order to focus

Where contemporaries' microscopes reached a magnification of around 30x, Van Leeuwenhoek made microscopes that were much more powerful. Most of Van Leeuwenhoek's microscopes magnified about 80x, but there were also outliers with a magnification factor of 250, which was phenomenal for the time

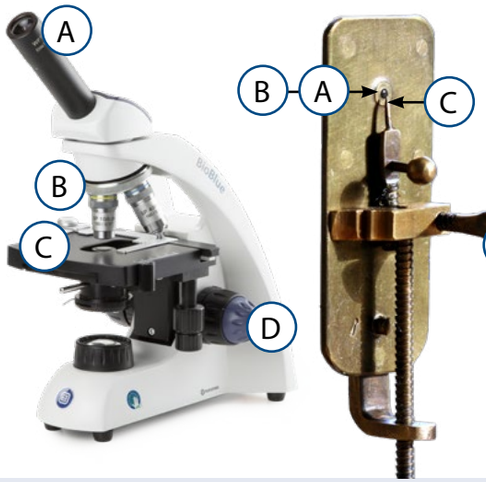

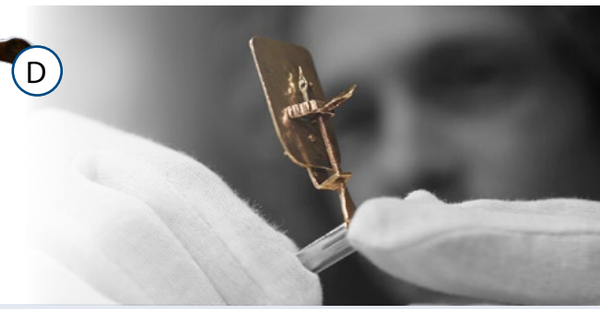

A. Eyepiece
B. Lens
C. place for object
D. focusing

stereo microscopes

Euromex stereo microscopes enable you to examine and analyze your specimens in both two and three dimensions. Combined with LED illumination the high-performance digital cameras and easy-to-use ImageFocus software provide perfect solutions for precise analysis and documentation

life science

stereo microscopes

product information

NEXIUSZOOM • PAGE 208
STEREOBLUE • PAGE 218
DZ SERIES • PAGE 222
Z SERIES • PAGE 228
P SERIES • PAGE 234

STEREO MICROSCOPES

NexiusZoom (EVO)

The NexiusZoom and NexiusZoom EVO stereo microscopes allow three-dimensional observation of your specimen, suitable for highly demanding applications. These top level zoom microscopes are perfect for analyzing all kinds of material surfaces or for observing and preparing biological samples

These stereo microscopes are supplied with a large choice of stands, with or without LED illumination. Ideal for a wide variety of applications. With additional lenses and objectives magnifications from 3.3x up to 220x can be achieved

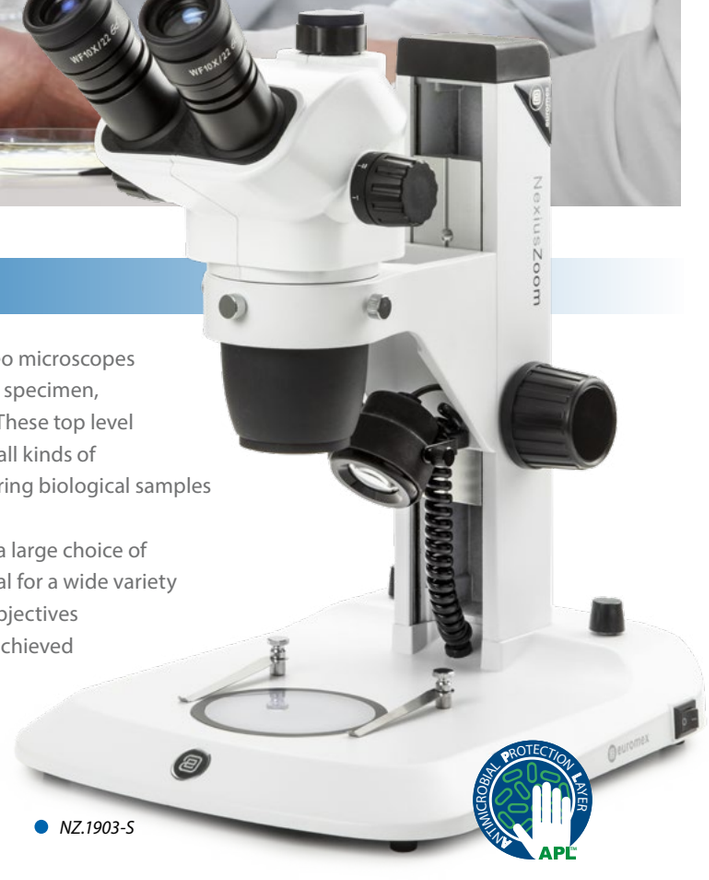

● *NZ.1903-S*

product information

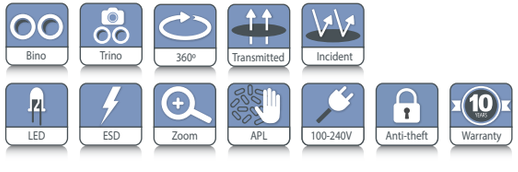

NZ.1903-S / NZ.1703-S
339 (h) x 256 (w) x 311 mm (d) | 5.1 kg
NZ.1903-P / NZ.1703-P
299 (h) x 256 (w) x 311 mm (d) | 5.2 kg
For weight of other products see table

HIGHLIGHTS

- **Binocular and trinocular heads with HWF 10x/22 mm or HWF 10x/23 mm eyepieces**
- **Zoom ratio 1 : 6.7, 6.7x to 45x or 1 : 8.4, 6.5x to 55x**
- **Click-stops standard on EVO models**
- **Ergonomic stands**
- **Double 3 W LED illuminations**
- **Configurations up to 220x magnification**
- **Large working distance (WD)**
- **10 Years warranty**

● *NZ.1903-PG*

● *NZ.1903-M*

SPECIFICATIONS

EYEPIECES

The standard NexiusZoom is supplied with a pair of HWF 10x/22 mm eyepieces. The NexiusZoom EVO is supplied with a pair of HWF 10x/23 mm eyepieces

HEAD

Binocular or trinocular heads with 45° inclined tubes. Both eyepieces have ± 5 diopter adjustments. Interpupillary distance adjustable between 54 mm and 75 mm. Trinocular head is supplied with a fixed light path beam splitter (50:50). The NexiusZoom EVO models are now equipped with click-stops

OBJECTIVES

The standard NexiusZoom is supplied with a 1:6.7 zoom objective with 0.67x to 4.5x magnifications, a field of view from 33 mm to 4.9 mm. Working distance 110 mm

The NexiusZoom EVO is supplied with a 1:8.4 zoom objective with 0.65x to 5.5x magnifications, a field of view from 35.4 mm to 4.2 mm. WD 110 mm

All optics are anti-fungus treated and anti-reflection coated for maximum light throughput

AUXILIARY LENSES

For extra working distances the following auxiliary lenses are available for both the standard NexiusZoom and NexiusZoom EVO: 0.3x, 0.4x, 0.5x, 0.75x, 1.5x and 2.0x. For fields of view and working distances, see table magnifications

● *NexiusZoom EVO NZ.5313*

POLARIZATION

The NexiusZoom and NexiusZoom EVO can be supplied with an optional 360° rotatable circular stage with built-in polarization filter and/or an optional rotatable analyzer filter in mount to be screwed under the objective

STAND

- Ergonomic pillar or rack & pinion stand with 3 W incident and 3 W transmitted LED illuminations (-P and -S stands)
- Ergonomic pillar stand with two 3 W goose-neck type incident LED illuminations on each side and a 3 W transmitted LED illumination (-PG stand)
- Ergonomic pillar stand with rotating mirror and 3 W LED transmitted and incident illuminations (-M stand)
- Ergonomic universal or boom stands, without illumination (-U and -B stands)
- Articulated arm stand for table mounting or with heavy desktop base plate, both without head holder, without illumination (-A and -AP stands)

All pillar and rack & pinion stands are supplied with two object clamps. Alloy metal cast, hardened coating

STAGE

180 x 155mm X-Y mechanical stage with 76 x 55mm translation stage and transparent glass plate for NexiusZoom, fixed on stage of microscope. Only available with new microscopes (due to fixing), so it has to be ordered with the purchase of a microscope (see picture: NZ.9505)

ILLUMINATION

3 W transmitted and incident LED illuminators with internal power supply 100-240 V. Both illuminators can be used simultaneously and the light intensities can be adjusted separately. The universal single or double arm stands and the articulated stands can be equipped with the ring illuminators LE.1974 and LE.1973 with respectively 72 or 144 power LEDs controlled in segments or with the LE.5212 illumination station, ideal for creating or lifting shades

ANTI-THEFT SLOT

At the back of the microscope a Kensington Security slot is placed, which can be used to secure the instrument from theft (only on th P-, PG-, and S-models)

PACKAGE CONTENT

Supplied with power cord, dust cover, a spare fuse and user manual. All packed in a polystyrene box

NZ.1902-S

NZ.1902-P

MAGNIFICATIONS

NexiusZoom: working distance and field of view with standard HWF 10x / 22 high wide field eyepieces

Zoom indication	Auxiliary lens 0.3x WD 287 mm		Auxiliary lens 0.4x WD 220 mm		Auxiliary lens 0.5x WD 183 mm		Auxiliary lens 0.75x WD 105 mm		Without auxiliary lens WD 110 mm		Auxiliary lens 1.5x WD 53 mm		Auxiliary lens 2x WD 34 mm	
	Total mag.	FoV in mm	Total mag.	FoV in mm	Total mag.	FoV in mm	Total mag.	FoV in mm	Total mag.	FoV in mm	Total mag.	FoV in mm	Total mag.	FoV in mm
0.67	2.0	109.5	2.7	82.1	3.35	65.7	5.0	43.8	6.7	32.8	10.1	21.9	13.4	16.4
0.7	2.1	104.8	2.8	78.6	3.5	62.9	5.3	41.9	7.0	31.4	10.5	21.0	14.0	15.7
0.8	2.4	91.7	3.2	68.8	4.0	55.0	6.0	36.7	8.0	27.5	12.0	18.3	16.0	13.8
1.0	3.0	73.3	4.0	55.0	5.0	44.0	7.5	29.3	10.0	22.0	15.0	14.7	20.0	11.0
1.5	4.5	48.9	6.0	36.7	7.5	29.3	11.3	19.6	15.0	14.7	22.5	9.8	30.0	7.3
2.0	6.0	36.7	8.0	27.5	10.0	22.0	15.0	14.7	20.0	11.0	30.0	7.3	40.0	5.5
3.0	9.0	24.4	12.0	18.3	15.0	14.7	22.5	9.8	30.0	7.3	45.0	4.9	60.0	3.7
4.0	12.0	18.3	16.0	13.8	20.0	11.0	30.0	7.3	40.0	5.5	60.0	3.7	80.0	2.8
4.5	13.5	16.3	18.0	12.2	22.5	9.8	33.8	6.5	45.0	4.9	67.5	3.3	90.0	2.4

NexiusZoom EVO: working distance and field of view with standard HWF 10x / 23 high wide field eyepieces

Zoom indication	Auxiliary lens 0.3x WD 287 mm		Auxiliary lens 0.4x WD 220 mm		Auxiliary lens 0.5x WD 183 mm		Auxiliary lens 0. 75x WD 105 mm		Without auxiliary lens WD 110 mm		Auxiliary lens 1.5x WD 53 mm		Auxiliary lens 2x WD 34 mm	
	Total mag.	FoV in mm	Total mag.	FoV in mm	Total mag.	FoV in mm	Total mag.	FoV in mm	Total mag.	FoV in mm	Total mag.	FoV in mm	Total mag.	FoV in mm
0.65	1.95	117.9	2.6	88.5	3.25	70.8	4.9	47.2	6.5	35.4	9.8	23.6	13.0	17.7
1.0	3.0	76.7	4.0	57.5	5.0	46.0	7.5	30.7	10.0	23.0	15.0	15.3	20.0	11.5
1.5	4.5	51.1	6.0	38.3	7.5	30.7	11.3	20.4	15.0	15.3	22.5	10.2	30.0	7.7
2.0	6.0	38.3	8.0	28.8	10.0	23.0	15.0	15.3	20.0	11.5	30.0	7.7	40.0	5.8
2.5	7.5	30.7	10.0	23.0	12.5	18.4	18.8	12.3	25.0	9.2	37.5	6.1	50.0	4.6
3.0	9.0	25.6	12.0	19.2	15.0	15.3	22.5	10.2	30.0	7.7	45.0	5.1	60.0	3.8
3.5	10.5	21.9	14.0	16.4	17.5	13.1	26.3	8.8	35.0	6.6	52.5	4.4	70.0	3.3
4.0	12.0	19.2	16.0	14.4	20.0	11.5	30.0	7.7	40.0	5.8	60.0	3.8	80.0	2..9
4.5	13.5	17.0	18.0	12.8	22.5	10.2	33.8	6.8	45.0	5.1	67.5	3.4	90.0	2.6
5.0	15.0	15.3	20.0	11.5	25.0	9.2	37.5	6.1	50.0	4.6	75.0	3.1	100.0	2.3
5.5	16.5	13.9	22.0	10.5	27.5	8.4	41.3	5.6	55.0	4.2	82.5	2.8	110.0	2.1

WD = working distance, FoV = Field of view, Total mag. = total magnification

DIMENSIONS

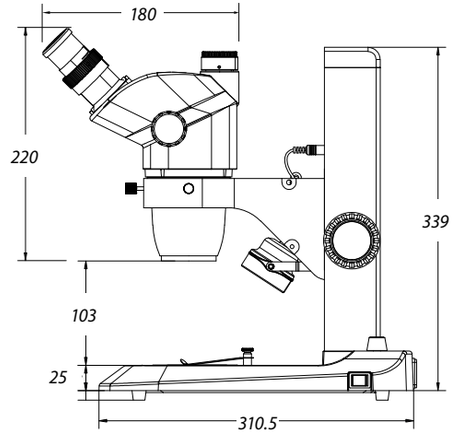

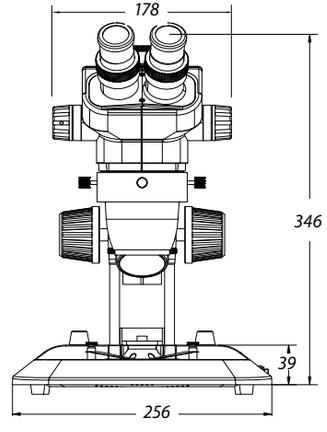

NZ.1902-U

NZ.1903-B

NZ.1903-AP

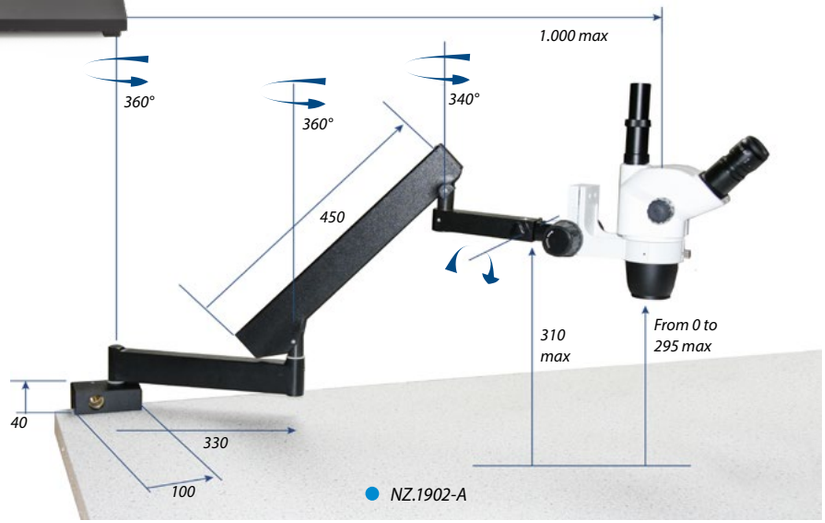

NZ.1902-A

NEXIUSZOOM 0.67-4.5 (WF 10X/22MM)

MODELS	Bino	Trino	Pillar stand	Rack & pinion stand	Universal stand	Boom stand on heavy base plate	Articulated arm stand on table clamp	Articulated arm stand on heavy base plate	Gooseneck dual LED	Mirror LED	Weight (kg)
NZ.1902-P	•		•								5.0
NZ.1902-PG	•		•						•		5.1
NZ.1902-S	•			•							4.9
NZ.1902-U	•				•						15.6
NZ.1902-B	•					•					22.1
NZ.1902-A	•						•				8.6
NZ.1902-AP	•							•			20.7
NZ.1903-P		•	•								5.2
NZ.1903-PG		•	•						•		5.3
NZ.1903-M		•	•							•	5.1
NZ.1903-S		•		•							5.1
NZ.1903-U		•			•						15.7
NZ.1903-B		•				•					22.2
NZ.1903-A		•					•				8.7
NZ.1903-AP	•							•			20.8

NEXIUSZOOM EVO 0.65-5.5 (WF 10X/23MM)

MODELS	Bino	Trino	Pillar stand	Rack & pinion stand	Universal stand	Boom stand on heavy base plate	Articulated arm stand on table clamp	Articulated arm stand on heavy base plate	Gooseneck dual LED	Mirror LED	Weight (kg)
NZ.1702-P	•		•								5.0
NZ.1702-PG	•		•						•		5.1
NZ.1702-M	•		•							•	4.9
NZ.1702-S	•			•							4.9
NZ.1702-U	•				•						15.6
NZ.1702-B	•					•					22.1
NZ.1702-A	•						•				8.6
NZ.1702-AP	•							•			20.7
NZ.1703-P		•	•								5.2
NZ.1703-PG		•	•						•		5.3
NZ.1703-M		•	•							•	5.1
NZ.1703-S		•		•							5.1
NZ.1703-U		•			•						15.7
NZ.1703-B		•				•					22.2
NZ.1703-A		•					•				8.7
NZ.1703-AP		•						•			20.8

The NexiusZoom EVO models are now equipped with click-stops

ACCESSORIES AND SPARE PARTS

HEADS & EYEPIECES

NZ.5302 NZ binocular head 0.67-4.5x*
NZ.5303 NZ trinocular head 0.67-4.5x*
NZ.5312 NZ EVO binocular head 0.65-5.5x*
NZ.5313 NZ EVO trinocular head 0.65-5.5x*
** without head holder*

NZ.6010 Pair of HWF 10x/22 mm eyepieces
NZ.6010-C HWF 10x/22 mm eyepiece only with crosshairs
NZ.6010-CM HWF 10x/22 mm eyepiece only with 10/100 micrometer and crosshairs
NZ.6015 Pair of HWF 15x/16 mm eyepieces for NZ
NZ.6020 Pair of HWF 20x/12 mm eyepieces for NZ
NZ.6099 Pair of eyecups for NZ
NZ.6210 Pair of HWF 10x/23 mm eyepieces for NZ EVO
NZ.6210-C HWF 10x/23 mm eyepiece only with crosshairs for NZ EVO
NZ.6210-CM HWF 10x/23 mm eyepiece only with 10/100 micrometer and crosshairs for NZ EVO
NZ.6020-CM HWF 20x/12 mm eyepieces with 10/100 micrometer and crosshairs

AUXILIARY LENSES

NZ.8903 Additional 0.3x lens for NZ. WD 287 mm. Only suitable for A, AP, U, B and BC stands
NZ.8904 Additional 0.4x lens for NZ. WD 220 mm. Only suitable for A, AP, U, B and BC stands
NZ.8905 Additional 0.5x lens for NZ. WD 183 mm. Not suitable for S stands
NZ.8907 Additional 0.75x lens for NZ. WD 105 mm
NZ.8915 Additional 1.5x lens for NZ. WD 53 mm
NZ.8920 Additional 2.0 lens for NZ. WD 34 mm. Not suitable for S stands

STANDS

NZ.9000 Ergo pillar stand without illumination. Height 35 cm
NZ.9005 Ergo pillar stand with adjustable transmitted 3 W LED illumination. Height 35 cm
NZ.9010 Ergo rack & pinion stand with incident and transmitted 3 W LED illuminators
NZ.9015 Ergo pillar stand with incident and transmitted 3 W LED illuminators
NZ.9018 Ergonomic pillar stand with two 3 W gooseneck type incident LED illuminations on each side and a 3 W transmitted LED illumination
NZ.9020 Universal one-arm stand without NZ head holder
NZ.9025 Black universal stand with table clamp without NZ head holder
NZ.9027 Black universal stand with heavy baseplate without NZ head holder
NZ.9030 Universal double-arm boom stand without NZ head holder
NZ.9032 Universal two-arm stand with table clamp without NZ head holder
NZ.9042 Stand with rotating mirror and indirect transmitted LED illumination

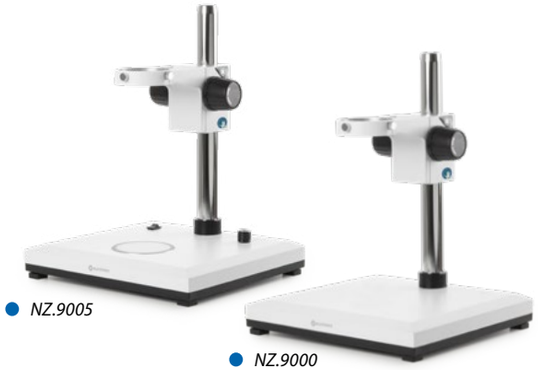

NZ.9005
NZ.9000

NZ.8903 *NZ.8904* *NZ.8905* *NZ.8907* *NZ.8915* *NZ.8920*

HEAD HOLDERS

NZ.9081 Head holder (76 mm) for NZ and black universal stand NZ.9025/NZ.9027
NZ.9090 NZ head holder for NZ.9020/9030/9032 pillar stands
NZ.9095 NZ head holder with fine and coarse adjustment for NZ.9020/9030/9032 pillar stands. Only available with new microscopes

NZ.9095

ILLUMINATION

LE.5207 Multi-functional dual 3 W LED adjustable light source. Equipped with two flexible gooseneck arms with LED illuminator
LE.5212 Euromex illumination station with two independently controlled goosenecks, a ring light and a transmitted stage illuminator (see photos on next page)
LE.5260 Interchangeable high power (standard) white 6500K light guide for NZ.9018/LE.5207/LE.5212, 1 pc
LE.5261 Interchangeable high power 365 nm flexible arm for NZ.9018/LE.5207/LE.5212, 1 pc
LE.5262 Interchangeable high power 395 nm flexible arm for NZ.9018/LE.5207/LE.5212, 1 pc
LE.5263 Interchangeable high power 420 nm flexible are for NZ.9018/LE.5207/LE.5212, 1 pc
LE.1974 Ring illuminator with 72 LEDs with adjustable light intensity. External power supply 110-240 Vac / 12 Vdc (50/60 Hz). With segment controller. Brightness of 20,000 Lux at 100 mm distance and color temperature of 6,500 K. Mounting for stereo head with diameter from 25 to 61 mm
LE.1973 Ring illuminator with 144 LEDs with adjustable light intensity. External power supply 100-240 Vac / 12 Vdc (50/60 Hz). With segment controller. Brightness of 23,000 Lux at 100 mm distance and color temperature of 6,500 K. Mounting for stereo head with diameter from 25 to 61 mm
LE.5210 Euromex cold light illuminator EK-1, 100 W. 110V and 230V models available
LE.5211 Euromex cold light illuminator, 150 W halogen. 110 V and 230 V models available
LE.5211-LED Euromex cold light illuminator LED, 30W high power LED
LE.5214 Dual arm light conductor, gooseneck self-sustaining, 50 cm long, 4 mm diameter core
LE.5215 Triple arm light conductor, gooseneck elf-sustaining, 50 cm long, 4 mm diameter core
LE.5222 Focusing head suitable for focusing lens LE.5214 and LE.5215. Needs LE.5224
LE.5224 Aspherical focusing lens for mounting in LE.5222

More illumination options, see chapter 11

STAGES

NZ.9505 Mechanical 180 x 155 mm X-Y stage with 75 x 55 mm translation and transparent glass plate
NZ.9524 360° rotatable circular stage with built-in polarization filter for NZ
NZ.9525 360° rotatable analyzer in mount to be screwed under head of NZ
AE.5168-NZ Heating stage for NZ microscope stage

CAMERA ACCESSORIES

NZ.9850 C-mount adapter with 0.5x lens for 1/2 inch cameras
AE.5130 Universal SLR adapter with built-in 2x lens for standard 23.2 mm tube. Needs T2 adapter
AE.5025 T2 adapter for Nikon D SLR digital camera
AE.5040 T2 adapter for Canon EOS SLR digital camera

6 LIFE SCIENCE STEREO MICROSCOPES

MISCELLANEOUS

NZ.8950 Protection glass window for NZ

NZ.9520 Polarization kit for NZ: 360° rotatable circular stage with built-in polarization filter (NZ.9524) + analyzer in mount to be screwed under head (NZ.9525)

NZ.9040 Darkfield attachment for NZ

NZ.9045 Fall protection ring for NexiusZoom pillars. Note: the one- and double arm stands are as a standard supplied with this ring

NZ.9570 Pair of object clamps for standard stage

NZ.9572 Adjustable GEM object clamp for P, PL and S stand of NZ

NZ.9950 Standard plexiglass object plate, opaque, with black border

NZ.9956 Pair of object stage plates (black/white) Ø 90 mm

NZ.9958 Standard glass object plate, opaque

NZ.9983-R 3 W LED replacement unit for NZ, incident illumination

NZ.9983 3 W LED replacement unit for NZ, transmitted illumination

AE.1112 Micrometer 76 x 26 mm slide, 50 mm/500 divisions, 100 µm per division

DISPOSABLES

PB.5245 Lens cleaning paper, 100 sheets per pack

PB.5274 Isopropyl alcohol 99%, 200 ml

PB.5275 Cleaning kit: lens fluid, lint free lens tissue/ paper, brush, air blower, cotton swabs

PB.5276 Microscope maintenance and servicing kit, 16pcs: cleaning brush, 6 pcs screwdriver set, air blower, 3 pcs Allen key 1.5, 2, 2.5 mm, lens cleaning fluid 20 ml, cleaning cloth 140 x 140 mm, 100 pcs lens tissue sheets, tube of maintenance grease, 10 ml bottle of oil, packed in a toolbox

NZ = NexiusZoom
WD = working distance

NZ.9505

The LE.5212 in two different configurations

QUICK INSTALLATION

how to set up a **stereo microscope**

Setting up your stereo microscope properly is essential to getting parfocal images during the entire zoom range. It also prevents head aches, stressful eyes and fatigue. Below you will find a setup guide that will help get the best out of your microscope

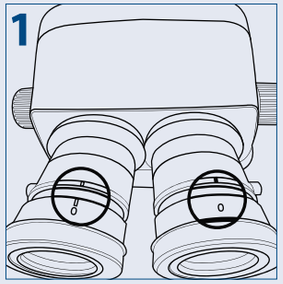

Turn the diopter adjustment rings of both eyepieces to position 0"

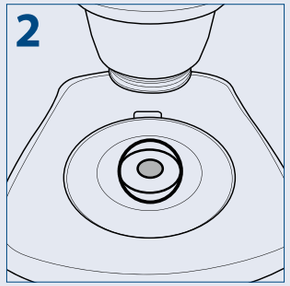

Put a specimen on the stage plate

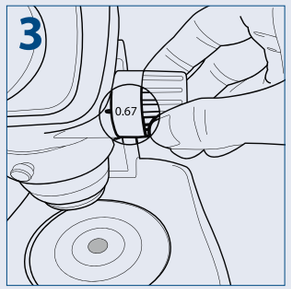

Turn the zoom adjustment knob to the lowest magnification

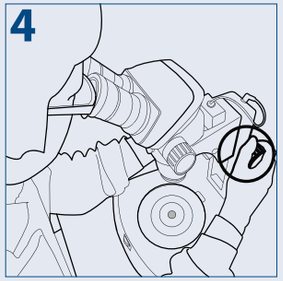

Rotate the focus adjustment knob to bring the specimen into focus

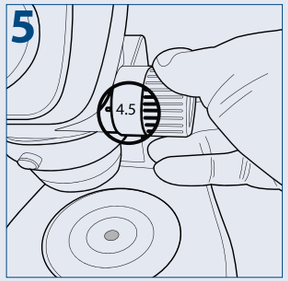

Turn the zoom adjustment knob to the highest magnification

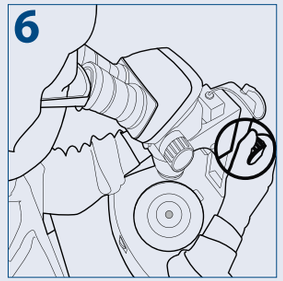

Rotate the focus adjustment knob to bring the specimen into focus

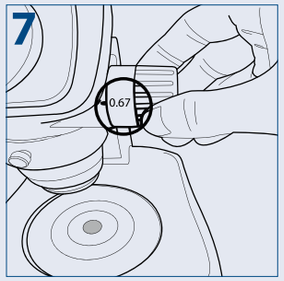

Turn the zoom adjustment knob to the lowest magnification

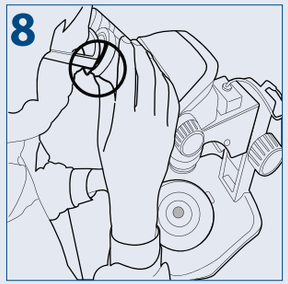

Rotate the diopter adjustment rings of the left and right eyepiece to bring the specimen into focus

PLEASE NOTE

Put the zoom adjustment knob at the highest magnification again and check the image focusing. The diopter adjustment is complete when the image is accurately focused during zooming

If not, please repeat steps 3 to 8

STEREO MICROSCOPES

BlueLine
DUTCH QUALITY

StereoBlue

These stereo (zoom) microscopes are especially developed for laboratory applications, education and are greatly appreciated by biologists, entomologists and geologists

Equipped with either a parfocal zoom system with 1:6.4 zoom ratio or a double magnification revolver - both with LED illumination - the StereoBlue range guarantees crisp, high resolution images

● *SB.1903*

product information

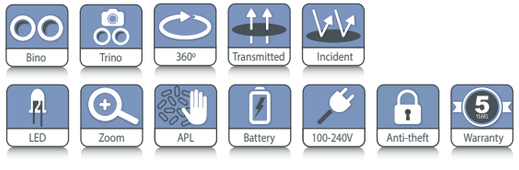

SB.1903
330 (h) x 220 (w) x 266 mm (d) | 4.4 kg
SB.1903-P
299 (h) x 220 (w) x 266 mm (d) | 5.1 kg
SB.1302/SB.1402
330 (h) x 220 (w) x 266 mm (d) | 4.0 kg
SB.1302-P/SB.1402-P
299 (h) x 220 (w) x 266 mm (d) | 4.7 kg

HIGHLIGHTS

- **Designed for professional use**
- **Robust and sturdy**
- **WF 10x/21 mm eyepieces**
- **Dual magnification or zoom models**
- **Available in ergonomic rack & pinion, pillar, universal and boom stands**
- **Double 3 W LED illumination**
- **Also available with batteries**
- **Ergonomic carrying grip**
- **5 Years warranty**

● *SB.1402-P*

SPECIFICATIONS

EYEPIECES

Pair of WF 10x/21 mm secured eyepieces supplied with eyecups

HEAD

- Binocular or trinocular 45° inclined tubes
- Diopter adjustment on both eyepieces, except the models SB.1302-P/1402-P and SB.1302 /1402 , which have diopter adjustment on one side
- Interpupillary distance adjustable between 55 mm and 75 mm
- Trinocular head is supplied with a fixed light path beam splitter (50:50)

All optics are anti-fungus treated and anti-reflection coated for maximum light throughput

DUAL MAGNIFICATION OBJECTIVES

- Nosepiece with dual 1x/3x or 2x/4x revolving objectives
- Magnifications 10x/30x or 20x/40x
- Field of view 21 mm/6.9 mm or 10.5 mm/5.25 mm
- Working distance 100 mm

ZOOM OBJECTIVE

- Zoom stereo 0.7x to 4.5x parfocal objective
- Magnification from 7x to 45x
- Field of view 29.9 mm to 4.6 mm
- Working distance 100 mm

Built-in ring light with 30 intensity adjustable LED's

EVO ZOOM OBJECTIVE

- Zoom stereo 0.5x to 5.5x parfocal objective
- Magnification from 5x to 55x
- Field of view 38 mm to 3.9 mm
- Working distance 100 mm

STAND

- The rack & pinion and pillar stands of the StereoBlue are equipped with ergonomic flat bases, complete with two object clamps and Ø 60 mm transparent and black/white stage plates The coarse adjustment is equipped with tension control
- The ergonomic universal (single arm stand, U) and boom stand (dual arm, B) are ideal for viewing large samples or working under the microscope. They come without illumination

- The U- and B-stand can be equipped with ring illuminators LE.1974 and LE.1973 with respectively 72 or 144 power LEDs controlled in segments, ideal for creating or lifting shades
- The stands are alloy metal casted with hardened coating

More illumination options see chapter 11 (Accessories)

ILLUMINATION

3 W transmitted and incident LED illuminators which can be used simultaneously. Model SB.3903 and SB.3903-P are equipped with 3 W transmitted and incident LED illuminators and a built-in 30 LED ring light incident illuminator. The light intensities can be adjusted separately. Also available with batteries (add "B" after article number, e.g. SB.1302-PB)

ANTI-THEFT SLOT

At the back of the microscope a Kensington Security slot is placed, which can be used to secure the instrument from theft (not on the U- and B-models)

PACKAGE CONTENT

Models with illumination are supplied with power cord, dust cover, eyecups, a spare fuse, Ø 60 mm transparent, black/white stage plates and user manual. All packed in a polystyrene box

STEREOBLUE 1X/3X AND 2X/4X OBJECTIVES

MODELS	Binocular	1x/3x objective	2x/4x objective	Rack & pinion stand 3 W LED	Pillar stand 3 W LED	Weight (kg)
SB.1302	•	•		•		3.3
SB.1302-P	•	•			•	4.2
SB.1402	•		•	•		3.3
SB.1402-P	•		•		•	4.2

STEREOBLUE 0.7X UP TO 4.5X ZOOM/0.5X UP TO 5.5X ZOOM EVO

MODELS	Bino	Trino	0.7 - 4.5x zoom	0.5 - 5.5x zoom EVO	Rack & pinion stand 3 W LED	Pillar stand 3 W LED	Universal stand	Boom stand on heavy base plate	30 LED right light	Weight (kg)
SB.1902	•		•		•					3.6
SB.1902-P	•		•			•				4.4
SB.1902-U	•		•				•			15.4
SB.1902-B	•		•					•		21.9
SB.1903		•	•		•					3.7
SB.1903-P		•	•			•				4.5
SB.1903-U		•	•				•			15.5
SB.1903-B		•	•					•		22.0
SB.3903		•	•		•				•	3.7
SB.3903-P		•	•			•			•	4.5
SB.1702	•			•	•					3.6
SB.1702-P	•			•		•				4.4
SB.1702-U	•			•			•			15.4
SB.1702-B	•			•				•		21.9
SB.1703		•		•	•					3.7
SB.1703-P		•		•		•				4.5
SB.1703-U		•		•			•			15.5
SB.1703-B		•		•				•		22.0

ACCESSORIES AND SPARE PARTS

EYEPIECES

SB.6210 Pair of HWF 10x/21 mm eyepieces
SB.6210-C WF 10X/21 mm eyepiece with crosshairs
SB.6210-M WF 10X/21 mm eyepiece with micrometer scale
SB.6015 Pair of HWF 15x/15 mm eyepieces
SB.6015-C WF 15X/15 mm eyepiece with crosshairs
SB.6015-M WF 15X/15 mm eyepiece with micrometer scale
SB.6020 Pair of HWF 20x/10 mm eyepieces
SB.6020-C WF 20/10 mm eyepiece with crosshairs
SB.6020-M WF 20/10 mm eyepiece with micrometer scale
SB.6099 Pair of eyecups

AUXILIARY LENSES

SB.8903 Auxiliary 0.3x lens for zoom models, WD 287 mm. Only suitable for boom and articulated stands
SB.8905 Auxiliary 0.5x lens for zoom models, WD 179 mm. Not suitable for SB.1X02, SB.1X03, SB.3903 and SB.3903-P
SB.8907 Auxiliary 0.75x lens for zoom models, WD 105 mm
SB.8915 Auxiliary 1.5x lens for zoom models, WD 53 mm. Not suitable for SB.39xx

POLARIZATION ATTACHMENT

SB.9520 Polarization kit : 360° rotatable circular stage with built-in polarization filter (SB.9524) + analyzer in mount to be screwed under the head (SB.9525)
SB.9524 360° rotatable circular stage with built-in polarization filter
SB.9525 360° rotatable analyzer in mount to be screwed under the head

MISCELLANEOUS

SB.8950 Protection glass window
SB.9020 Universal single-arm stand without head holder and without illumination
SB.9030 Universal double-arm stand without head holder and without illumination
SB.9090 Head holder for SB.9020
SB.9040 Darkfield attachment, only for –S and –P models
SB.9045 Fall protection ring for StereoBlue pillars. Note: the one- and double arm stands are as a standard supplied with this ring
SB.9570 Pair of object clamps for stage
SB.9952 Stage plate transparent, Ø 60 mm
SB.9956 Stage plate black/white, Ø 60 mm
SB.9983-R 3 W LED replacement unit, incident illumination
SB.9983 3 W LED replacement unit, transmitted illumination
AE.1112 Micrometer 76 x 26 mm slide, 50 mm/50 divisions

CAMERA ACCESSORIES

SB.9850 C-mount adapter with 0.5x lens for 1/2" cameras. Only for trinocular models
AE.5130 Universal SLR camera adapter with 2x projection lens for 23.2 mm tubes. Needs T2 adapter
AE.5025 T2 adapter for Nikon D digital SLR cameras
AE.5040 T2 adapter for Canon EOS digital SLR cameras

Other T2 adapters on request

DISPOSABLES

PB.5245 Lens cleaning paper, 100 sheets per pack
PB.5274 Isopropyl alcohol 99% (200 ml)
PB.5275 Cleaning kit: lens cleaning fluid, lint free lens tissue, brush, air blower, cotton swabs

DIMENSIONS

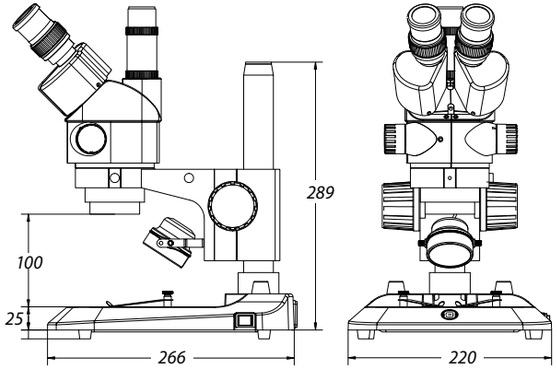

STEREO MICROSCOPES

DZ series

The modular stereo microscopes of the DZ series combine ergonomics with very high resolution optics. Either standard versions or customized models are available thanks to the large choice of central zoom units, eyepieces, stands and accessories

A fluorescence illumination unit enables scientific research such as for studies of vertebrate development and gene function, teratology, genetics and environmental sciences

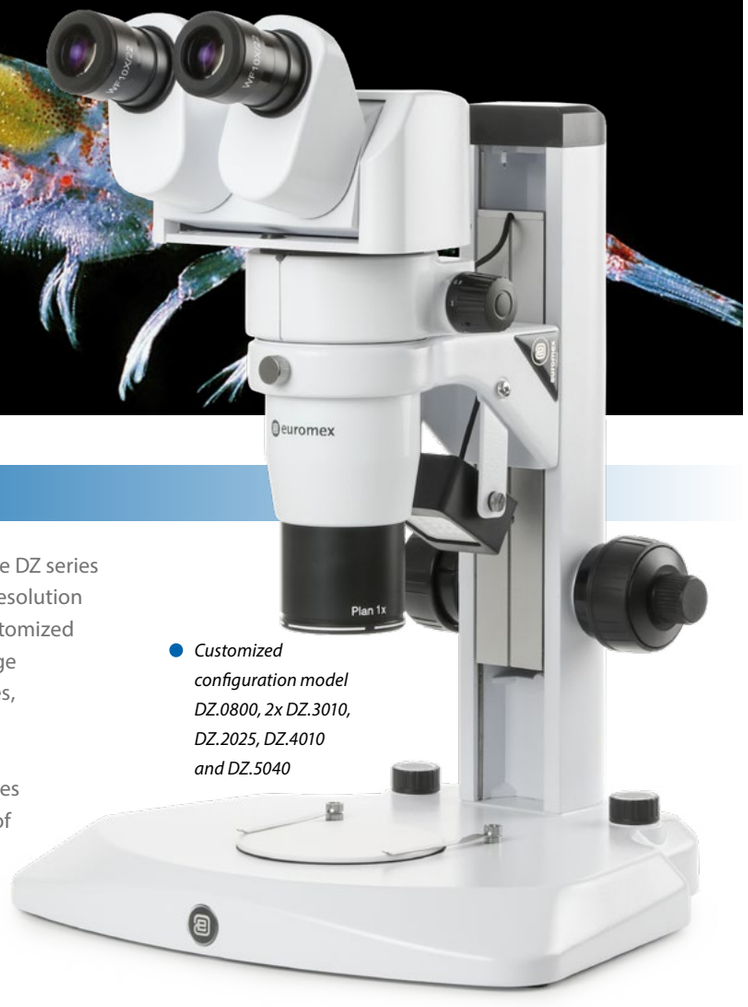

- *Customized configuration model DZ.0800, 2x DZ.3010, DZ.2025, DZ.4010 and DZ.5040*

product information

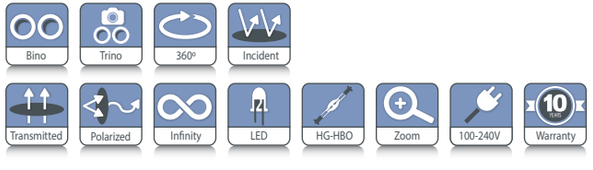

DZ.1100 / DZ.1600 / DZ.1800
305 (h) x 330 (w) x 285 (d) mm | 6.0 kg
DZ.1105 / DZ.1605 / DZ.1805
444 (h) x 330 (w) x 285 (d) mm | 5.2 kg
For weight of other products see table 'Models'

HIGHLIGHTS

- **Binocular and trinocular models**
- **Six standard configurations or customized configuration**
- **Ergonomic tilting head from 0° to 35° tilting or fixed 20° inclined head, EWF 10x/22mm eyepieces,**
- **Three central zoom units from 4x to 320x**
- **Fields of view from 55 mm to 1.4 mm**
- **Working distances from 126 mm to 33 mm**
- **Ergonomic rack & pinion stands, universal stand or articulated arm stand**
- **Transmitted and incident LED illumination**
- **100 W epi-fluorescence mercury vapor illuminator**
- **10 Years warranty**

- *Customized specification fluorescence model*

SPECIFICATIONS

EYEPIECES

Pair of EWF 10x/22 mm eyepieces

HEAD

- Ergonomic binocular 0-35° tilting head
- Binocular 20° tilted head
- Diopter ± 5 adjustment on both eyepieces
- Interpupillary distance from 55 to 75 mm
- Photo ports for one or two cameras
- Click-stops

CENTRAL ZOOM UNIT

Three central zoom units are available:

- 1:6.3 for total magnifications from 8 to 50x
- 1:8 for total magnifications from 8 to 64x
- 1:10 for total magnifications from 8 to 80x

COMMON MAIN OBJECTIVE

Standard configurations are supplied with a plan apochromatic common main objective (CMO) 1x, working distance 78 mm. Other plan apochromatic common main objectives 0.5x (WD 126 mm) and 2x (WD 33 mm) are also available

All optics have an anti-reflection coating for maximum light throughput and are anti-fungus treated

STAND

Large ergonomic stand with Ø 100 mm object plate and two object clamps. Coarse adjustment with adjustable friction. A universal stand and an articulated arm stand without illumination are also available for configurations built to customer's specifications

ILLUMINATION

The transmitted and incident 3 W LED illuminations are supplied with a built-in 100-240 V power supply. Both illuminators can be used simultaneously and the light intensities can be adjusted separately

PACKAGE CONTENT

Supplied with power cord, dust cover, a spare fuse and user manual. All packed in a polystyrene box

STANDARD CONFIGURATIONS

All six standard configurations are equipped with EWF 10x/22mm eyepieces, plan achromatic common main objective (CMO) 1x and rack & pinion stand with incident and transmitted LED illumination

DZ SERIES STANDARD

MODELS	Binocular 20° head	Binocular ergo 0 to 35° tilting	Magnifications from 8 to 50x	Magnifications from 8 to 64x	Magnifications from 8 to 80x
DZ.1100		•			•
DZ.1105	•				•
DZ.1800		•		•	
DZ.1805	•			•	
DZ.1600		•	•		
DZ.1605	•		•		

All equipped with EWF 10x/22mm eyepieces

MAGNIFICATIONS AND FIELDS OF VIEW FOR STANDARD CONFIGURATIONS

MODELS			0.5x Objective WD 126 mm		1.0x Objective WD 78 mm		2.0x Objective WD 33 mm	
		Zoom indication	Total magnification	Field of view	Total magnification	Field of view	Total magnification	Field of view
DZ.1100 / DZ.1105	DZ.1800 / DZ.1805	0.8x	4x	55	8x	27.5	16x	13.7
		1.0x	5x	44	10x	22	20x	11
	DZ.1600 / DZ.1605	1.5x	7.5x	29.3	15x	14.6	30x	7.3
		2.0x	10x	22	20x	11	40x	5.5
		3.0x	15x	14.6	30x	7.3	60x	3.6
		4.0x	20x	11	40x	5.5	80x	2.7
		5.0x	25x	8.8	50x	4.4	100x	2.2
		6.0x	30x	7.3	60x	3.6	120x	1.8
		6.4x	32x	6.8	64x	3.4	128x	1.7
		7.0x	35x	6.3	70x	3.1	140x	1.5
		8.0x	40x	5.5	80x	2.75	160x	1.4

DIMENSIONS

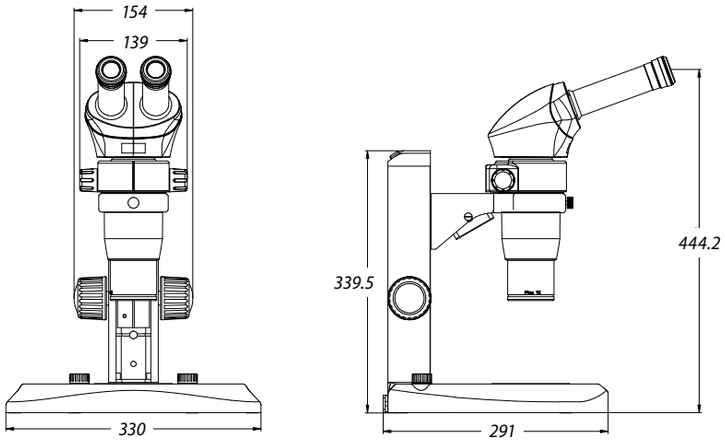

BUILD YOUR OWN STEREO MICROSCOPE

A customized DZ series stereo microscope can be configured to customer's specifications by choosing one of the three central zoom units DZ.0630, DZ.0800 or DZ.1000 and adding the necessary components for the application. A pair of eyepieces, an ergonomic 0 to 35° tilting head or fixed 20° inclined head, a 0.5x, 1x or 2x common main objective (CMO), a large ergonomic LED stand, a universal or an articulated arm stand. Other accessories, such as a photo/camera unit or dual iris diaphragm, can complete the configuration

CENTRAL ZOOM UNITS

DZ.0630 Central zoom unit 1:6.3 with magnifications from 8 to 50 times

DZ.0800 Central zoom unit 1:8 with magnifications from 8 to 64 times

DZ.1000 Central zoom unit 1:10 with magnifications from 8 to 80 times

HEADS

DZ.2020 Ergonomic binocular 0-35° tilting head without eyepieces

DZ.2025 Binocular 20° tilted head without eyepieces Interpupillary distance from 55 to 75 mm

EYEPIECES

DZ.3010 EWF 10x/22 eyepiece, 1 piece

DZ.3012 EWF 10x/22 eyepiece with crosshairs, 1 piece

DZ.3015 WF 15x/16 eyepiece, 1 piece

DZ.3020 WF 20x/12 eyepiece, 1 piece

● *Eyepieces*

IRIS DIAPHRAGMS

DZ.9010 Double iris diaphragms for increased depth of field

OBJECTIVES

DZ.4003 Plan common main objective 0.3x. WD 276 mm

DZ.4005 Plan apochromatic common main objective 0.5x. WD 126 mm

DZ.4010 Plan apochromatic common main objective 1.0x. WD 78 mm

DZ.4020 Plan apochromatic common main objective 2.0x. WD 33 mm

All optics are anti-fungus treated and anti-reflection coated for maximum light throughput

STANDS

DZ.5020 Universal stand without illumination. Dimensions 460(h) x 280 (l) x 400 (d) mm

DZ.5040 Ergonomic stand with transmitted and incident LED illumination. Coaxial coarse and fine adjustments, 100 graduations, 0.015 mm per graduations

65.980 Articulated arm stand for mounting on table without head holder (65.981)

65.981 Head holder 76 mm for DZ series and black articulated arm stand (65.980)

NZ.9025 Articulated arm stand with table clamp (without DZ head holder 65.981)

NZ.9027 Articulated arm stand with heavy stand (without DZ head holder 65.981)

NZ.9042 Stand with rotating mirror and transmitted LED illumination

NZ.9030 Boom (double arm) stand with heavy stand (without head holder NZ.9090)

NZ.9032 Boom (double arm) stand with table clamp (without head holder NZ.9090)

NZ.9090 Head holder (for NZ.9020, NZ. 9030 and NZ.9032)

FLUORESCENCE ATTACHMENT

DZ.9050 Attachment for fluorescence with 100 W mercury vapor illumination with GFP-B and GFP-LP filter sets and one 23.2 mm photo port. Supplied with power supply

DZ.9060 Filter cube with GFP-B band-pass filter set for blue excitation, EX 460-500, DM 505, EM 510-560

ACCESSORIES/SPARE PARTS

DZ.9061 Filter cube with GFP-L long-pass filter set for Blue excitation, EX 460-500, DM 505, EM 510

DZ.9049 Empty filter cube

Other premium and premium zero-pixel shift optimized filter sets are also available on request. See end of chapter 5

- *customized configuration model DZ.0800, 2x DZ.3010, DZ.2025, DZ.9005, DZ.9010, DZ.4010 and DZ.5040*

POLARIZATION ATTACHMENTS

DZ.9045 Polarizer, 360° rotatable, to be mounted on common main objectives of DZ series

DZ.9047 Polarizer, 360° rotatable, to be placed on the stage

CAMERA ACCESSORIES

DZ.9005 Photo port attachment with one 23.2 mm tube

DZ.9007 Photo port attachment with two 23.2 mm tubes

DZ.9013 C-mount 1x objective for insertion into photo port attachments

AE.5130 Universal SLR camera adapter with 2x projection lens for 23.2 mm tubes. Needs T2 adapter

AE.5025 T2 adapter for Nikon D digital SLR cameras

AE.5040 T2 adapter for Canon EOS digital SLR cameras

AE.5063 0.7x Objective with C-mount. To be mounted over a 23.2 mm tube of a Z-, M-. F-series

Other T2 adapters on request

MISCELLANEOUS

DZ.9020 Large 185 x 145 mm stage with mechanical X-Y 50 x 50 mm stage, to be moved by hand

DZ.9040 Darkfield attachment for DZ.5040

AE.1112 Micrometer slide, 50 mm/50 divisions

AE.1900 Glass object plate, Ø 100 mm

AE.1903 Acrylic white/black object plate

50.875 Adjustable GEM clamp

SL.5520 LED replacement for incident LED illumination of DZ.5040 stand

DISPOSABLES

AE.1385 100 W HBO mercury vapor bulb for fluorescence

PB.5245 Lens cleaning paper, 100 sheets per pack

PB.5274 Isopropyl alcohol 99% (200 ml)

PB.5275 Cleaning kit: lens cleaning fluid, lint free lens tissue, brush, air blower, cotton swabs

- *DZ.2020, ergonomic binocular tilting head*

Z series

These versatile high-end stereo microscopes are highly appreciated by the professionals of life science research and industry because of the excellent optical and mechanical characteristics of this series

ZE.1624 and ST.1735

product information

HEAD + STAND ST.1740
210 (h) x 160 (w) x 240 mm (d) | 6.9 kg

HIGHLIGHTS

- **Modular system**
- **Binocular and trinocular models**
- **Standard HWF 10x/23 mm eyepieces**
- **Stereo zoom heads with a fixed 45° inclined tubes**
- **Zoom magnification objectives**
- **Superior resolution optics**
- **Multiple stands**
- **10 Years warranty**

ZE.1657 - ST.1710

SPECIFICATIONS

EYEPIECES

Pair of SWF 10x/23 mm eyepieces

HEAD

- Binocular or trinocular heads with a 45° inclined tubes
- Diopter ± 6° adjustment on both tubes for Z series
  Interpupillary distance from 55 to 75 mm
- Optional click-stops

ZOOM MAGNIFICATION OBJECTIVES

- Zoom objective with magnifications from 0.4x to 2.5x
- Zoom objective with magnifications from 0.7x to 4.5x
- Zoom objective with magnifications from 1x to 7x

Zoom objectives with click stops are also available on request
All optics have an anti-reflection coating for maximum light throughput and are anti-fungus treated

STANDS WITHOUT ILLUMINATION

ST.1710 Pillar stand with ST.1790 head holder. Pillar height 210 mm, diameter Ø 20 mm Dimensions 250 (h) x 150 (w)x 240 (d) mm

ST.1718 Pillar ergonomically flat stand with ST.1790 head holder. Pillar height 213 mm, diameter Ø 20 mm. Dimensions 258 (h) x 330 (w) x 306 (d)

STANDS WITH ILLUMINATION

ST.1740 Rack & pinion stand with 5 W halogen illumination. Supplied with frosted filter for transmitted illumination and a blue filter for incident illumination. Both illuminations are adjustable and can be used simultaneously. With integrated power supply. Dimensions: (d)240 x (w)160 x (h)290 min/max height 240-290 mm

Stand with 3 W LED illumination and rotatable double-sided coated mirror

BOOM STANDS

ST.1720 Articulated one arm boom stand with a 270 x 270 mm base, 610 mm and Ø 29 mm pillar, with orientable stereo head holder ST.1794. Vertical post 780 mm. Weight 19.5 kg

65.980 Articulated one arm stand to be mounted on table without 83 mm head holder. Depth positioning of stereo head between 33 and 100 cm. WD between 0 and a maximum of 295 mm

65.983 Head holder 85 mm diameter for 65.980

FOCUSING

Coarse adjustment and friction adjustment for head holders for ST.1790, ST.1794, ST1796. The head holders ST.1796 is also equipped with a fine focusing adjustment

PACKAGE CONTENT

Models with illumination are supplied with power cord, dust cover, a spare fuse and user manual. All packed in a polystyrene box

HEAD HOLDERS

Other optional head holders for boom stands

ST.1790 Head holder with coarse adjustment*

ST.1796 Head holder with coarse and fine adjustment*

ST.1792 Head holder with coarse adjustment and opening for one fiber light guide*

ST.1794 Orientable head holder with coarse adjustment and opening for one fiber light guide**

** Not suitable for boom stands ST.1720 and 65.980/65.983*

*** Only suitable for boom stand ST.1720*

All head holders have an internal diameter of 84 mm and a friction adjustment

● *ST.1718*

ZOOM STEREO HEADS

MODELS	Binocular	Trinocular	Tilt tubes	Objective zoom	Magnification	WD (mm)	Field of view (mm)
ZE.1624	•		45°	0.7 - 4.5x	7 - 45x	93	32/5.1
ZE.1654		•	45°	0.7 - 4.5x	7 - 45x	93	32/5.1
ZE.1657		•*	45°	0.7 - 4.5x	7 - 45x	104	32/5.1
ZE.1670	•		45°	1 - 7x	10 - 70x	104	23/3.3

** When the trinocular tube is engaged, the image is still available in both other tubes*
All zoom stereo heads are supplied with SWF 10x/23 mm eyepieces without eyecups

STANDS

MODELS	Column (mm)	Diameter (mm)	Rack & pinion	Base (w x d mm)	Height (mm)	Head holder	Illumination
ST.1710	210	20		240 x 150	250	ST.1790	
ST.1718	213	20		330 x 306	285	ST.1790	
ST.1720	610	29		780 x 270	650	ST.1794	
ST.1735			•	240 x 160	290		3 W LED
ST.1740			•	240 x 160	290		10 W Hal
65.980/65.983			•	Ø 1000 *	0/295	65.983	

** Length with the two arms totally extended*

DIMENSIONS

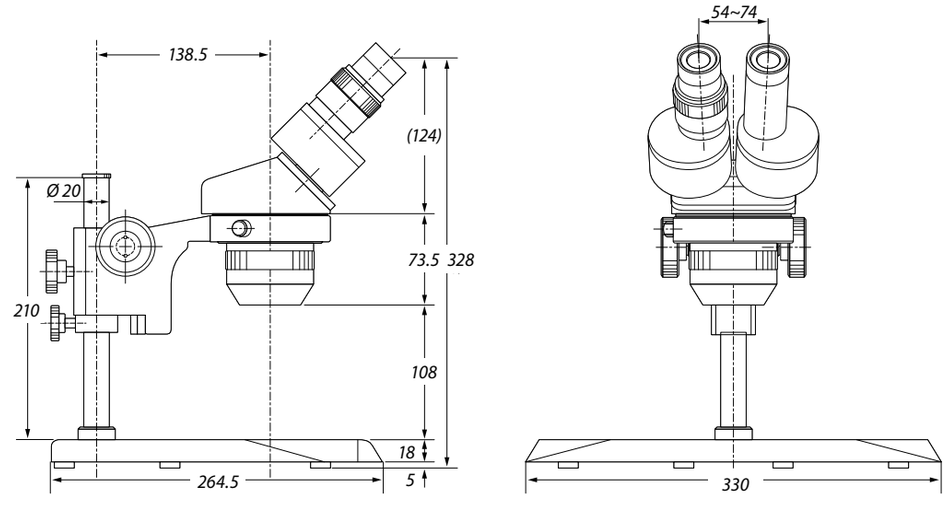

ACCESSORIES AND SPARE PARTS

EYEPIECES

(without eyecups)

AE.1836 Pair of SWF 10x/23 mm eyepieces

AE.1834 Pair of SWF 12.5x/20 mm eyepieces

AE.1840 Pair of SWF 30x/7.5 mm eyepieces

AE.5439 Pair of eyecups

AE.5425 Pair of eyecups, suitable when wearing spectacles

MICROMETER EYEPIECE

(with adjustable lens)

AE.1839 SWF 10x/21 mm with 10 mm/100 micrometer reticle and crosshairs

MICROMETER SLIDE

AE.1112 Object slide 76 x 26 mm with micrometer 50 mm/500, 100 µm/division

ADDITIONAL LENSES

(for ZE.1659)

AE.1822 Additional 0.57x lens. WD 300 mm

ADDITIONAL LENSES

(for ZE.1624, ZE.1654, ZE.1670, ZE.1626)

AE.1870 Additional 0.44x lens. WD 180 mm. Suitable with ST.1720, ST.1780, ST.1785 and 65.980 stands

AE.1856 Additional 0.5x lens. WD 150 mm. Suitable with ST.1740. Maximum object size is 15 mm

AE.1857 Additional 0.75x lens. WD 97 mm

AE.1858 Additional 1.5x lens. WD 50 mm

AE.1859 Additional 2.0x lens. WD 34 mm

ADDITIONAL LENSE

(for ZE.1657)

AE.1818 Additional 1.5x lens. WD 57 mm

PROTECTION WINDOW

(to be screwed under the objectives)

AE.1845 Protection window for all heads of ZE series except ZE.1659

MECHANICAL STAGE

AE.1876 Plain stage 145 x 115 mm with 75 x 50 mm X-Y mechanical stage on ball bearings. Horizontal coaxial adjustment. Double Vernier with 0.1 mm graduations. Only with ST.1710 and ST.1740

OBJECT PLATES - Ø 94 MM

AE.1882 Acrylic black/white object plate

FILTERS - Ø 40 MM

AE.1897 Frosted glass filter

OBJECT HOLDER

AE.5446 Orientable clamp for gems. Interchangeable with object plate clamp

FUSE

AE.5252 Fuses for ST.1740 stand. Per 10 pieces

CAMERA ACCESSORIES

DC.1320 Projection 1x objective with C-mount

DC.1324 Projection 0.5x objective with C-mount for cameras with 1/2" sensor. To be inserted into a 23.2 mm tube

DC.1326 Projection 0.33x objective with C-mount for cameras with 1/3" sensor. To be inserted into a 23.2 mm tube

AE.5130 Universal SLR camera adapter with 2x projection lens for 23.2 mm tubes. Needs T2 adapter

AE.5025 T2 adapter for Nikon D digital SLR cameras

AE.5040 T2 adapter for Canon EOS digital SLR cameras

Other T2 adapters on request

● *AE.1877*

● *AE.1876*

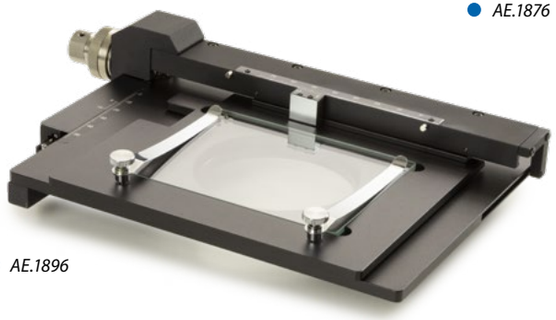

● *AE.1896*

P series

P series

The microscopes of the P series are designed specifically for small lab purposes and come in 10/30x or 20x/40x magnification versions. By using optional eyepieces this can result in magnifications from 5x to 80x

The P series microscopes are compact and lightweight, ideal for lab or field work

● *60.200 (P-20)*

product information

Bino | Transmitted | Incident | LED | Halogen

APL | Battery | 100-240V | 100-240V | Warranty

60.100 / 60.200
290 (h) x 160 (w) x 240 (d) mm | 6.9 kg

HIGHLIGHTS

- **Binocular models**
- **Easy to use**
- **360° revolving rotatable head with 45° inclined tubes**
- **Secured WF 10x/20 mm eyepieces**
- **10x/30x and 20x/40x magnification in revolving nosepiece**
- **Robust rack & pinion stand with powerful halogen or LED illumination**
- **LED illumination with rechargeable AA batteries for cordless use**
- **Incident and transmitted illuminations can be used simultaneously**
- **Lightweight; easy to carry to any location**
- **5 Years warranty**

● *60.100 (P-10)*

SPECIFICATIONS

EYEPIECES

Secured pair wide field eyepieces WF 10x/20 m m.
Supplied with eyecups

HEAD

Binocular head with 45° inclined tubes. One tube supplied with diopter adjustment. Interpupillary distance from 55 to 75 mm

OBJECTIVES

- The P-10 and P-10 LED models are supplied with revolving 1x/3x objectives for a total magnification of 10 and 30 times with fields of view from 20 mm to 6.7 mm
- The P-20 and P20-8 LED models are supplied with revolving 2x/4x objectives for a total magnification of 20 and 40 times with fields of view from 10 mm to 5 mm

By using 5x or 20x eyepieces, magnifications from 5 to 80x can be achieved

All optics are anti-fungus treated and anti-reflection coated for maximum light throughput

STAND

Robust pillar stand with 35 mm coarse adjustment.
Supplied with white/black object plate and two object clamps

ILLUMINATION

The P-10 and P-20 models are supplied with 10 W 12 V halogen transmitted and incident illumination and internal power supply. Both illuminators can be operated independently or simultaneously

The P-10 LED and P-20 LED models are supplied with high power LED transmitted and incident illumination. With three rechargeable AA batteries for a maximum of 35 hours continuous cordless operation. Both illuminators can be operated independently or simultaneously.
Comes with external mains adapter

CAMERAS

Euromex offers a wide range of industrial and laboratory grade cameras, see chapter 6 (Digital Solutions).
For P series, the camera replaces one of the eyepieces

PACKAGE CONTENT

Supplied with power cord, three rechargeable AA batteries, dust cover, a spare fuse and user manual (and spare bulb for halogen models). All packed in a polystyrene box

ACCESSORIES AND SPARE PARTS

EYEPIECES

50.805	Pair of wide field eyepieces WF 5x/22 mm
50.810	Pair of wide field eyepieces WF 10x/20 mm
50.811	Micrometer eyepiece WF 10x/20 mm, 10 mm/100
50.815	Pair of wide field eyepieces WF 15x/16 mm
50.820	Pair of wide field eyepieces WF 20x/10 mm
50.840	Pair of eyecups

MISCELLANEOUS

50.871	Black/white stage plate 94 mm diameter
50.873	Glass stage plate 94 mm diameter
50.875	Adjustable GEM object clamp for P series
50.876	Darkfield attachment
50.882	Spare halogen bulb 12 V 10 W for P series (transmitted illumination)
50.961	Plastic case for P series

DISPOSABLES

AE.1112	Micrometer slide, 50 mm/50 divisions
PB.5245	Lens cleaning paper, 100 sheets per pack
PB.5274	Isopropyl alcohol 99% (200 ml)
PB.5275	Cleaning kit: lens cleaning fluid, lint free lens tissue, brush, air blower and cotton swabs

DIMENSIONS

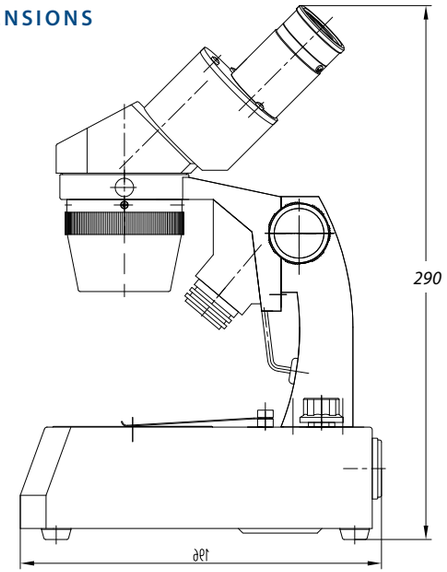

● 50.810 ● 50.815 ● 50.820

MODELS	45° head	1x/3x objective	2x/4x objective	Transmitted halogen illumination	Incident halogen illumination	Transmitted LED illumination	Incident LED illumination
60.100 (P-10)	•	•		•	•		
60.110 (P-10 LED)	•	•				•	•
60.200 (P-20)	•		•	•	•		
60.210 (P-20 LED)	•		•			•	•

about
microscope optics

RESOLVING POWER

A human eye cannot distinguish two points when these are closer than approximately 0.3 mm or 300 µm to each other. That is what is called resolving power"; the capacity to resolve two points which are close together or optical resolution", the ability of an imaging system to resolve detail

MAGNIFICATION

If one needs to detect details of 10 µm, one needs at least 300 µm / 10 µm = 30x magnification in order to resolve this detail. Knowing that conventional stereo microscopes can magnify - without the help of additional lenses and without introducing additional optical aberrations – up to approximately max. 100 times, the smallest detail that a stereo microscope can resolve is 300 µm / 100 = 3 µm

For details smaller than approximately 3 µm, one could better choose an optical compound microscope to resolve these details

OPTICAL RESOLUTION

The resolution of an optical microscope can be defined as the shortest distance between two points that the microscope can reveal for a human eye or camera

The theoretical maximum resolution is limited by the diffraction laws of physics and is equal to
r = 1.22 λ / (N.A. of objective + N.A. condenser)
with r = resolution, N.A. = numerical aperture,
λ = imaging wavelength

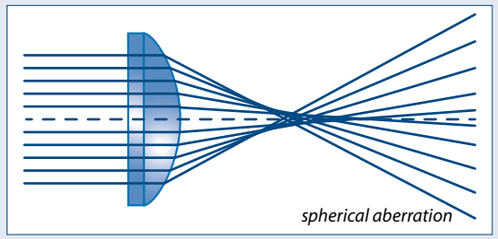

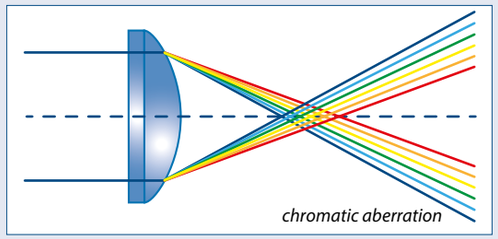

ABERRATIONS

In practice, the resolution of a microscope is lower than the theoretical resolution due to optical aberrations, improper illumination or bad alignment of the optics and components of the microscope. Despite corrections for chromatic and spherical aberrations, coma, astigmatism and distortion, the real maximum resolution of a microscope with a 100x objective is about 0.25 µm for 550 nm light rays

Chromatic aberration	Difference in focus of different colors caused by difference in refractive indices for each wavelength
Spherical aberration	Difference in focus caused by defects or irregularities on the surface of a lens
Astigmatism	Rays traveling through two perpendicular planes having different focal planes
Coma aberration	Variation in magnification over the entrance pupil
Distortion	Stretching of an image as a variation in magnification across the lens field

digital solutions

Get ready to discover the digital world of microscopy with the newest Euromex digital laboratory products. The broad Euromex product range of digital cameras and digital microscopes with built-in camera offers the best suitable solutions for your specific application needs

Euromex digital laboratory products incorporate all the latest available technology in this field such as WiFi, HDMI and sCMOS sensors, especially designed for fluorescent microscopy. Our digital solutions package includes the powerful ImageFocus software for image analysis

life science

digital solutions

product information

DIGITAL MICROSCOPES • PAGE 240
MACROZOOMS • PAGE 244
WIFI CAMERAS • PAGE 252
USB CAMERAS • PAGE 253
HD CAMERAS • PAGE 256
COOLED CAMERAS • PAGE 260
TABLET CAMERA • PAGE 262
SOFTWARE • PAGE 264
ADAPTERS • PAGE 268

BlueLine DUTCH QUALITY

NeoLED™ euromex optical technology

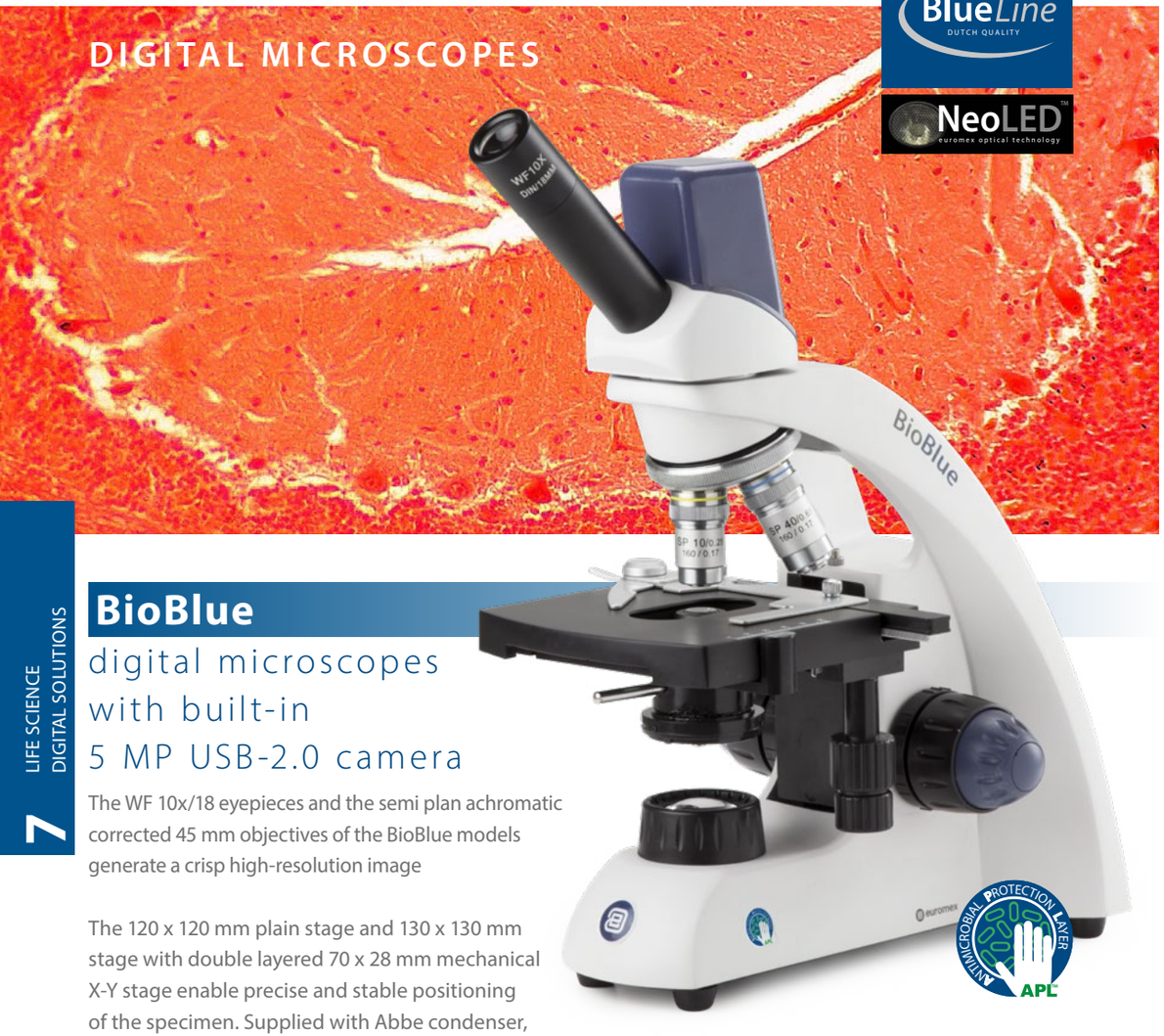

BioBlue

digital microscopes with built-in 5 MP USB-2.0 camera

The WF 10x/18 eyepieces and the semi plan achromatic corrected 45 mm objectives of the BioBlue models generate a crisp high-resolution image

The 120 x 120 mm plain stage and 130 x 130 mm stage with double layered 70 x 28 mm mechanical X-Y stage enable precise and stable positioning of the specimen. Supplied with Abbe condenser, NeoLED™ or LED illumination and rechargeable AA batteries for corded and cordless use

product information

● *BB.4225*

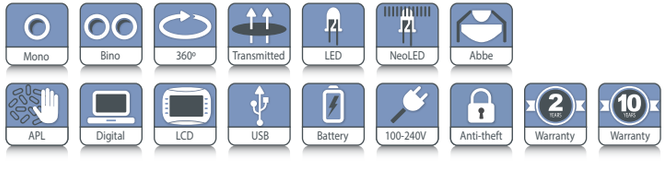

BB.4225 / BB.4245 /BB.4255
340 (h) x 155 (w) x 230 mm (d) | 3.4 kg
BB.4267 / BB.4269
360 (h) x 155 (w) x 230 mm (d) | 4.1 kg

HIGHLIGHTS

- **Monocular and binocular models**
- **Models with a 7" LCD screen**
- **Reserved quadruple nosepiece for semi plan objectives**
- **Built-in digital 5.0 MP USB-2.0 camera**
- **Integrated mechanical stage**
- **LED and NeoLED™ illumination**
- **Cordless operation**
- **10 Years warranty (2 years on camera)**

● *BB.4220-LCD*

SPECIFICATIONS

CAMERA

All the BioBlue digital microscopes are equipped with a 5.0 MP 1/2.8" CMOS USB-2.0 camera, a maximum of resolution 2560 x 1920, 24 bits color depth, up to 30 frames per second. Supplied with USB-2.0 cable and a micrometer 1mm/100 slide

SOFTWARE

The capture and analysis ImageFocus Plus software allows to save images in .jpg, .tif, .bmp or .dicom formats as well as .avi format videos. Measurements and annotations can be done on live or captured images. Compatible with Windows 10 and higher, both 32 and 64 bits configurations. A Mac OS version is also available. Free software can be downloaded from our website

MODELS WITH LCD SCREEN

The BioBlue is also available with a 7" LCD screen, with all the features of the regular BioBlue . This screen allows live viewing, saving images and videos directly to a micro SD card and even has a basic line measurement function included. The HD LCD screen can only be operated as a stand alone

Screen resolution 1920 x 1080 @ 30 fps, image resolution upto 1844 x 1080 in JPG and video resolution 1280 x 720 AVI format

For full microscope specifications and accessories see chapter 1: Biological microscopes

● *The digital heads*

MODELS	Mono	Bino	LCD	4/10/40x SMP objectives	Semi plan S60x objective	Semi plan S100x objective	Integrated X-Y stage	1 W LED	NeoLED	Weight (kg)
BB.4205	•			•				•		2.9
BB.4225	•			•			•	•		3.4
BB.4245	•			•	•		•	•		3.4
BB.4255	•			•		•	•	•		3.4
BB.4267		•		•		•	•		•	4.1
BB.4269		•		•			•		•	4.1
BB.4200-LCD			•	•				•		2.9
BB.4220-LCD			•	•			•	•		3.4

bscope®

NeoLED™ euromex optical technology

BS. 1157-PLi

bScope®

digital microscopes with built-in 5.0 MP USB-2.0 camera

The versatile and evolutive bScope® microscopes are well-equipped and intensively used in universities, small to mid-sized laboratories and for veterinary applications

The digital bScope® comes with WF 10x/20 mm eyepieces and is exclusive available in binocular versions. Complete with E-plan IOS and Plan IOS infinity corrected objectives for brightfield observations. Also EPLPHi IOS and PLPHi IOS infinity corrected objectives for phase contrast observations

product information

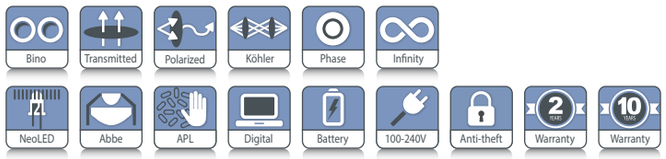

BS.1157-PLi
409 (h) x 195 (w) x 235 (d) | 7.1 kg

HIGHLIGHTS

- **Binocular model**
- **Integrated 5.0 MP CMOS color USB.2 camera**
- **2592 x 1944 pixels**
- **7 frames per second (2592 x 1944 pixels)**
- **27 frames per second (1280 x 960 pixels)**
- **10 Years warranty (2 years on camera)**

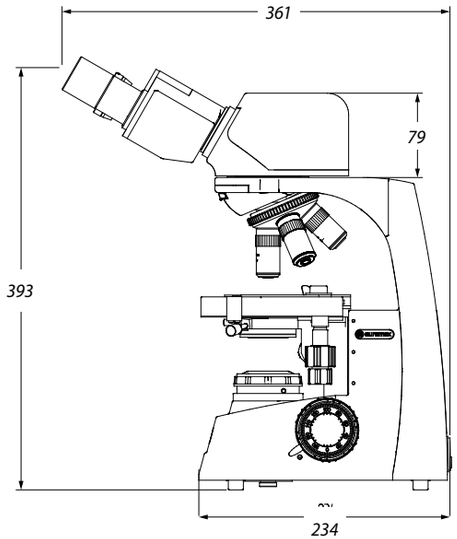

SPECIFICATIONS

CAMERA

The digital bScope microscopes are equipped with a 5.0 MP 1/2.5 inch CMOS USB-2.0 camera, 24 bits color depth, 7 frames per second (2592 x 1944 pixels) or 27 frames per second (1280 x 960 pixels). Dynamic range is 76 dB and signal/noise ratio 41 dB. Supplied with USB-2.0 cable and a micrometer 1mm/100 calibration slide

SOFTWARE

The capture and analysis ImageFocus Alpha software allows t o save images in .jpg, .tif, .bmp or .dicom formats as well as .avi format videos. Measurements and annotations can be done on live or captured images. Compatible with Windows 10 and higher, both 32 and 64 bits configurations. A Mac OS version is also available. Free software can be downloaded from our website. For full microscope specifications and accessories see chapter 4: Biological microscopes

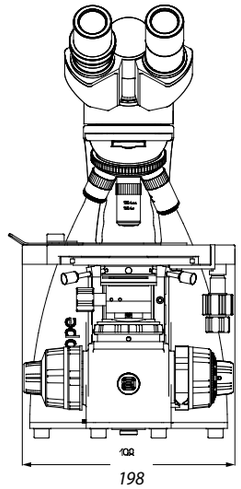

MODELS	Binocular head	HWF 10x/20 mm eyepieces	Quintuple nosepiece E-plan IOS 4/10/S40/S100x	Quintuple nosepiece plan IOS 4/10/S40/S100x	Köhler NeoLED™
BS.1157-EPLi	•	•	•		•
BS.1157-PLi	•	•		•	•

All models can optionally be supplied with three rechargeable AA batteries

MZ.5000

digital macrozoom

The digital MacroZoom microscope is built around one 0.7 to 5x zoom objective and enables inspection of objects directly on an 11.6" LCD screen, -5° to 15° inclination. This kind of microscope is well-suited for inspection and quality control departments

The digital MacroZoom is equipped with a built-in full High Definition 1080p camera which can deliver up to 60 images per second and is connected either to the supplied and attached 11.6" screen or an external stand-alone HD screen

● *MZ.5000*

product information

MZ.5000
445/635 (h) x 320 (w) x 260 mm (d) | 4.6 kg

HIGHLIGHTS

- **MonoZoom stand-alone digital microscope**
- **Zoom from 0.7x up to 5x**
- **105 mm working distance**
- **110 mm working distance with 0.5x lens**
- **Built-in incident LED ring light**
- **Built-in 1080p 2 MP HD camera**
- **HD 11.6 inch screen, -5° to 15°**
- **Built-in mouse driven on-screen software**
- **Conveniently build-in capture button**
- **Removable 32 GB memory stick**
- **Metal stand**
- **2 Years warranty**

● *Adjustable screen*

SPECIFICATIONS

CENTRAL ZOOM OBJECTIVE

The digital MacroZoom MZ.5000 features a single zoom objective with a 0.7 to 5x zoom magnification. Zoom adjustment engravings on 1, 1.5, 2, 3, 4 and 5x. The working distance is 105 mm. Supplied with a 0.5x additional lens with a working distance of 110 mm

STAND

The Central Zoom Objective with attached screen and LED ring light is mounted on a rack and pinion system that sits on a large 320 x 260 mm metal stand. Travel range is 225 mm

ILLUMINATION

A supplied 5,500 K LED ring light with 56 LED's can be mounted under the microscope body. The intensity is adjustable

BUILT-IN CAMERA

Built-in HD 1080p high definition 2 MP CMOS high speed camera, 1920 x 1080 pixels, 60 fps with attached 11.6 screen. The standard field of view is 29.8 to 4.18 and with the 0.5x additional lens from 59 to 8.35. The camera has one HDMI output that can be connected either to the attached screen or to an external HD screen

Two other USB ports accept the supplied 32 GB USB memory stick (up to 128 GB) and a supplied wireless mouse that drives the built-in on-screen software. The operator can also take and save images to the SD card by pressing on a capture button at the right side of microscope body

BUILT-IN SOFTWARE

The built-in on-screen software is mouse driven and features functions such as Capture image, Freeze image, Automatic white balance, Automatic exposition, File manager, Grids and camera settings such as exposure time, gain, saturation, contrast, sharpness, HDR
Measurement functions are also available from the software such as line, area, angle. Images are saved in .jpg format and videos are saved in .avi format. With the digital zoom function, objects can be observed with a magnification up to 70 times

PACKAGE CONTENT

Supplied with 32 GB memory stick, mouse, short HDMI cable for attached screen, external 100-240 Vac / 12Vdc / 3 A power supply

LIFE SCIENCE
DIGITAL SOLUTIONS
7

MZ.4700(-HDS)

digital autofocus macrozoom 4K/1080p

The MZ.4700 is an integration of a 1080p HDMI camera, an electrically controlled continuous zoom auto-focus objective together with a stand and illumination system. The MZ.4700 enables direct inspection of objects on a HD screen. The mouse-driven built-in software controls the camera parameters and enables measurements on screen, capturing and saving .jpg or .bmp format pictures and .mp4 format video on an USB memory stick

● *MZ.4700*

product information

MZ.4700
350 (h) x375 (w) x 250 mm (d) | 5.1 kg

HIGHLIGHTS

- **Stand-alone or PC operated**
- **Sony 1/2.8" 4K/1080P CMOS sensor**
  18x optical zoom ratio
- **Optical zoom factor up to 5.6x**
- **On-screen magnification from 2.8 to 47x**
- **205 - 215 mm Working distance**
- **Standard LED ring light**
- **Optional directional LED ring light**
- **Built-in mouse-driven software**
- **2 Years warranty**

● *MZ.4700-HDS*

● *MZ.4735*

● *MZ.4730*

SPECIFICATIONS

ZOOM OBJECTIVE

- The 16 elements objective has a 18x zoom ratio and produces magnifications up to 0.56 magnification with a manual or automatic focusing function
- Field of views from 255 x 145 mm (1x zoom) to 14 x 8 mm (18x zoom)
- On-screen magnification 2.8 to 47x @190 mm WD (24" screen)
- Focusing range is between 205 and 225 mm

WD = working distance

CAMERA

- The 2 MP camera is equipped with a Sony 1/2.8 inch 4K UHD/1080P CMOS High Definition sensor with high signal-to-noise ratio generating a 3840 x 8160 pixels video streaming up to 60 images per second
- The 4K/UHD signal fits the HDMI input of a HD screen
- Image and video storage is done with a built-in SD card
- Stand-alone or PC operated (ImageFocus Alpha)

BUILT-IN SOFTWARE

The built-in intuitive software is controlled by the supplied and to the camera connected mouse. It features a camera-, an autofocus control panel and a measurement toolbar

ILLUMINATION

A standard LED ring light assures a good standard lighting of the sample. A ring light with 12x 1W, 30° directional LEDs enables very flexible lighting of the sample

STAND

- The MacroZoom can be mounted on a dedicated pole stand with or without a dedicated HD screen
- With the 30° directional 12x 1W LED ring light (MZ. 4735,) the MacroZoom (MZ.4705) can also be mounted on the NexiusZoom stands

PACKAGE CONTENT

Supplied with a standard ring light, a 32 GB SD card, mouse, HDMI cable and external 100-240 Vac / 12Vdc / 3A power supply

ORDER PRODUCT REFERENCES

MZ.4700	Stand-alone digital autofocus MacroZoom [1] with standard [2] stand
MZ.4700-HDS	Stand-alone digital autofocus MacroZoom [1] with standard [2] stand and HD screen
MZ.4705	Stand-alone digital autofocus MacroZoom [1]
MZ.4710	Standard [2] stand for MZ.4705
MZ.4712	11 inch HD screen for MZ.4710 inclusive pillar attachment
MZ.4730	Standard LED ring light
MZ.4735	Directional 12 x 1W LEDs ring light [2]

[1] Supplied with a 32 GB SD card, mouse, HDMI cable and External 100-240 Vac / 12Vdc / 3A power supply

[2] With the MZ. 4735 a MZ.4705 can also be mounted on NexiusZoom stands

LIFE SCIENCE
DIGITAL SOLUTIONS
7

MACROZOOMS

HDMI Mouse

MZ.4600

digital macrozoom

This entry-level digital MacroZoom is equipped with a 0.7 to 5x zoom objective enables direct inspection of objects on external HD screen (not supplied). The mouse-driven built-in software control the camera parameters and enables measurements on screen, capturing and saving .jpg or .bmp format pictures and .mp4 format video on an USB memory stick

The MZ.4600 has a built-in high definition 1080p 2 MP camera which can deliver up to 60 images per seconds and needs to be connected to an external stand-alone HD screen

- *MZ.4600*

product information

Zoom Digital 100-240V Warranty

MZ.4600
323 (h) 320 (w) 260 mm (d) | 4.4 kg

HIGHLIGHTS

- **MonoZoom stand-alone digital microscope**
- **Optical zoom from 0.7x up to 5x**
- **Magnification on screen from 2.5 up to 19x**
- **100 mm working distance**
- **Built-in 1080p 2 MP HD camera**
- **Built-in mouse driven on-screen software**
- **Measurement function on screen**
- **jpg or bmp saved images**
- **mp4 video recording up to max 2 hrs**
- **Removable 32 GB memory stick**
- **Metal stand**
- **2 Years warranty**

- *MZ.4600-NZ*

SPECIFICATIONS

MACROZOOM OBJECTIVE

The Digital MacroZoom MZ.46000 features a single zoom objective with a 0.7 to 5x zoom magnification. Zoom adjustment engravings on 0.7, 1, 1.5, 2, 2.5, 3, 4 and 5x. The working distance is 100 mm. An optional 3D attachment enables a 45° angle observation

STAND

- Standard pillar stand (Ø 32 mm) that sits on a large 320 x 260 mm metal stand without illumination
- Travel range is 50 mm, max. object height 22 cm
- The MacroZoom objective can also be mounted in the NexiusZoom

ILLUMINATION

An external (not supplied) illumination system should be used, such as:

- LED ring lights LE.1973 or LE.1974
- LED illumination station LE.5212 or LE.5207 which can be mounted under the MacroZoom body

BUILT- IN CAMERA

Built-in HD 1080p high definition 2 MP 1/2.8" CMOS high speed camera, 1920 x 1080 pixels, 2.9 µm x 2.9 µm pixels and 60 images per seconds. Magnification on screen from 2.5x up to 19x with field of view from 210 x 120 mm up to 27 x 15 mm based on a 24 inch HD screen. The camera has one HDMI output that needs to be connected to an external HD screen (not supplied). Two USB ports accept the supplied 32 GB USB memory stick (up to 64 GB) and a supplied wireless mouse that drives the built-in on-screen software. The operator can take .jpg or .bmp images and .mp4 video's and save them to an external supplied memory stick

BUILT- IN SOFTWARE

The built-in on-screen software (only English language) is mouse driven and features functions such as capture or record images, automatic or manual white balance, color adjustments, file manager, grids, flip/mirror, freese image, WDR (white dark regulation), crosshair and crosslines, text annotations. Camera settings such as automatic or manual exposition time, gain, brightness, saturation, contrast, sharpness, digital 1-6x zoom are available. Measurement functions are also available from the software such as line, polygon circle, rectangle, angle, arc. Images are saved in .jpg or .bmp format and video in .mp4 videos format

LIFE SCIENCE
DIGITAL SOLUTIONS
7

PACKAGE CONTENT MZ.4600

Supplied with

- Digital MacroZoom body only (MZ.4605)
- 32 GB memory stick, mouse, HDMI cable for HD screen, external 100-240 Vac / 12Vdc / 3A power supply
- Standard pillar stand with head holder, without illumination (MZ.4610)

ORDER PRODUCT REFERENCES:

MZ.4600 MacroZoom body with standard stand

MZ.4600-NZ MacroZoom body with NexiusZoom stand (NZ.9018), equipped with two 2 W gooseneck LED illuminations

MZ.4605 MacroZoom body alone

MZ.4610 Standard* stand for MZ body MZ.4605

MZ.4615 3D attachment for observation under 45° angle*

MZ.4625 Additional 0.5x lens working distance 165 mm

MZ.4627 Additional 0.7x lens working distance 128 mm

MZ.4622 Additional 2x lens working distance 40 mm

● *3-D attachment MZ.4615*
Below: view from above and from a 45° angle

OPTIONAL LIGHT SOURCES:

LE.1973 Ring light with 144 LEDs with adjustable light intensity. External power supply 100-240. Vac / 12 Vdc (50/60 Hz). With segment controller. Luminous flux of 23,000 Lux and color temperature of 6500 K

LE.1974 Ring light with 72 LEDs with adjustable light intensity. External power supply 110-240 Vac / 12 Vdc (50/60 Hz). With segment controller. Luminous flux of 20,000 Lux and color temperature of 6500 K

LE.5207 Light source with 2x 3W LED light source mounted on two self-sustaining Gooseneck-type 56 cm long guide. Luminous flux 25.000 Lux, 6500K

LE.5212 Multiple light source station with

- two self-sustaining gooseneck-type 56 cm long guides with 2x 3 Watt white 6500 K power LEDs, each with a 3-lens focusing heads
- 60 LEDs ring light, 6.500 K, 24.000 Lux
- transmitted 42 LEDs light stage, 6.500 K, 8.000 Lux. Stage diameter 94.5 mm, 15 mm thick

● *MZ.4600 with LE.1973*

how to match **camera resolution**

In microscopy, the image of the sample under observation is projected by the optical components of the microscope (objective lenses, eyepiece lenses, intermediate lens or camera relay lenses) onto the surface of a camera sensor or the retina of a human eye

Not the total amount of pixels – which basically determines the field of view of the camera image - is primordial but a more important specification is the pixel size of the camera sensor. What might be astonishing to know about digital resolution of camera's is the fact, that the higher the magnification, the fewer pixels the chip of a camera needs!

To optimize the transfer of the details of the sample (resolving power) to the camera, the pixel size of the photodiodes of the camera sensor is a key element

EXAMPLE OF A 10X/0.25 OBJECTIVE WITH 1/2 INCH CAMERA SYSTEM

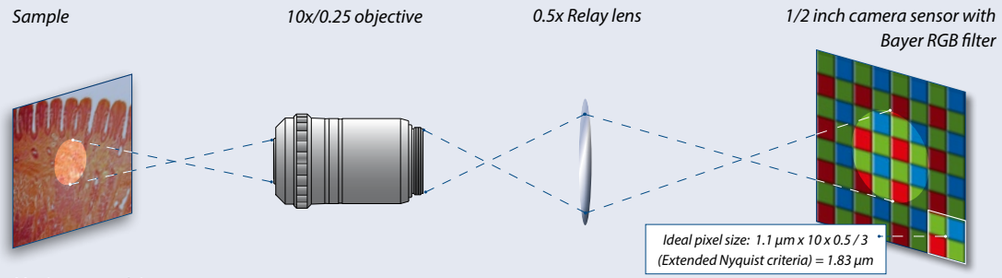

Maximum resolving power limit of a10x/0.25 objective is a 1.1 µm detail

Projected image is 1.1 µm x 10x x 0.5 = 5.5 µm

MAXIMUM AND OPTIMUM PIXEL SIZE REQUIREMENTS:

Obj. Magn.	NA	Resolving power[1] (µm)	Projected size (µm)	Projected size with 0.5x lens (µm)	Maximum [2] camera pixel size (µm)	Optimum [2] [3] camera pixel size (µm)
1x	(0.04)	6.90	6.90	3.45	1.72	1.15
2x	(0.06)	4.60	9.20	4.60	2.30	1.53
4x	(0.10)	2.80	11.2	5.60	2.80	1.86
10x	(0.25)	1.10	11.0	5.50	2.75	1.83
20x	(0.40)	0.69	13.8	6.90	3.45	2.30
40x	(0.65)	0.42	16.8	8.40	4.20	2.80
60x	(0.80)	0.34	20.4	10.2	5.10	2.40
100x	(1.25)	0.22	22.0	11.0	5.50	3.67

(1) Resolving power of the objectives: $r = 1.22 \cdot \lambda / (NA\ Objective + NA\ Condenser)$. With NA = numerical aperture , λ = wavelength and r = optical resolving power. The resolving power limits are based on various theoretical calculations. Low specimen contrast, improper or low illumination conditions, etc, may serve to lower resolving power limits, more often than not, the real-maximum values are not realized in practice

(2) The Nyquist criterion states that the maximum camera pixel size can't exceed half of the resolving limit of the objective. For high resolution images, the Nyquist criterion is even extended to 2.5 to 3 pixels per detail and thus the optimum camera pixel size (3) is calculated as maximum 1/3 of the resolving limit of the objective

(3) Although smaller pixel size of photodiodes of the camera sensor improve the resolution, smaller pixel sizes lower signal to noise ratios, lower the dynamic range and collect less light! Binning techniques can compensate for lower signal to noise ratios

CMEX-5 WiFi-2 5.0 MP

digital WiFi camera with 1/2.5 inch CMOS sensor

The CMEX-5 WiFi-3 1080p camera is equipped with a 5.0 MP CMOS sensor with 12 bits grayscale conversion and a 24 bits color rendering

The CMEX camera streams H.264 encoded high resolution images simultaneously to several WiFi enabled smartphones, tablets or computers with iOS, Android or Windows operating systems

Power supply through USB charger or computer USB port. Standard C-mount mounting

Adding a WiFi camera to your microscope is ideal for wireless sharing/viewing of microscope images. Ideal for demonstrations where remote viewing is needed

Android app for this camera is available on www.euromex.com. IOS app can be downloaded from the App Store (free of charge). ImageFocus Alpha software can be used by means of WiFi on PC's and Macs and is available on www.euromex.com

The camera is powered by the included USB charger or a computers USB port. Standard 0.37x C-mount objective is included

MODEL	Sensor	Sensor size (inches)	Pixels size (µm)	Resolutions	Grayscale conversion	Color rendering	Signal/ Noise(dB)	Dynamic (dB)	Sensitivity V/lux-sec	Product number
CMEX-5 WiFi-3	CMOS	1/2.5"	2.2 x 2.2	1280 x 720	12 bits	24 bits	60	66.5	0.53	DC.5000-WiFi-3

The CMEX-5 WiFi-3 camera is supplied in a box with USB cable, 30.0 and 30.5 mm adapters to use with stereo microscopes and a 0.37x C-mount objective

CMEX USB-2.0 cameras

with fast CMOS sensor

The CMEX-2f, CMEX-5f and CMEX-12f are equipped with a fast CMOS sensor. The CMEX cameras are equipped with USB-2.0 data interface

Besides capturing images and videos, the ImageFocus Plus software allows measurements on still and live images and annotations on captured images. Compatible with Windows 10 and higher, both 32 and 64 bits configurations. A Mac OS version is also available. Free software can be downloaded from our website

MODELS	Number of pixels (MP)	Sensor	Pixels size (µm)	Resolutions	Max. frames (p/sec)	Grayscale conversion	Color rendering	Dynamic (dB)	Sensitivity V/lux-sec (at 550 nm)	Product number
CMEX-2f	2.0	1/2.9" CMOS	2.8 x 2.8	1920 x 1080	30	8 bits	24 bits	72	0.51	DC.2000f
CMEX-5f	5.0	1/2.8" CMOS	2.0 x 2.0	2560 x 1920 1600 x 1200	30 50	8 bits	24 bits	72	2.0	DC.5000f
CMEX-12f	12.0	1/2.3" CMOS	1.33 x 1.33	4000 x 3000 2592 x 1944	15 30	8 bits	24 bits	60	1.5	DC.12000f

The CMEX cameras are supplied with USB cable, 30.0 and 30.5 mm to 23.2 mm conversion adapters for use with stereo microscopes and a 1 mm/100 (10 µm/division) calibration slide. The cameras are supplied with a 0.45x C-mount objective

CMEX-18 Pro

Advanced CMEX USB-3.0 cameras

with CMOS sensor

The CMEX-3 Pro, -5 Pro, -10 Pro and -18 Pro cameras are equipped with a 3.1, 5.1, 10 or 18 MP CMOS sensor with 12 bits grayscale conversion and a 24 bits color rendering. These cameras are equipped with a USB-3.0 data interface, enabling fast frame rate

Besides capturing images and videos, the ImageFocus Alpha software allows measurements on still and live images and annotations on captured images. Compatible with Windows 10 and higher, both 32 and 64 bits configurations. A 2 GB RAM 2.8 GHz computer and 17 inch display is recommended. A Mac OS version is available. Free software can be downloaded from our website

MODELS	Sensor	Sensor size (inch)	Pixels size (µm)	Exposure time	Resolutions	Max. frames (p/sec)	Signal/ Noise (dB)	Dynamic (dB)	Sensitivity V/lux-sec	Product number
CMEX-3 Pro	CMOS	1/3"	2.2 x 2.2	1 ms ~ 2000 ms	2048 x 1534 1024 x 770	28 53	39	100	1.9	DC.3000-PRO
CMEX-5 Pro	CMOS	1/2.5"	2.2 x 2.2	1 ms ~ 2000 ms	2560 x 1922 1270 x 960 640 x 480	14 39 100	39	68.	1.76	DC.5000-PRO
CMEX-10 Pro	CMOS	1/2.3"	1.67 x 1.67	1 ms ~ 2000 ms	3584 x 2746 1792 x 1372	8 25	35.5	63.5	0.31	DC. 10000-PRO
CMEX-18 Pro	CMOS	1/2.3"	1.25 x 1.25	1 ms ~ 2000 ms	4912 x 3684 2456 x 1842 1228 x 922	6 18 32	42	65	1.3	DC. 18000-PRO

The CMEX-3 Pro, -5 Pro, -10 Pro and -18 Pro cameras are supplied with USB-3.0 cable, 30.0 and 30.5 mm adapters to use with stereo microscopes, 1 mm/100 (10 µm/division) calibration slide. The CMEX-5 Pro, -10 Pro and -18 Pro are supplied with a 0.5x C-mount objective. The CMEX-3 Pro is supplied with a 0.37x C-mount objective

sCMEX

sCMEX USB-3.0 cameras

with scientific grade sCMOS sensor

The sCMEX-3, sCMEX-6, sCMEX-20 and sCMEX-32 cameras are equipped with a scientific grade back illuminated Sony sCMOS sensor with 16 bits grayscale conversion and an outstanding 36 bits color rendering. Suitable for brightfield, darkfield and fluorescence. The sCMEX cameras are equipped with a USB-3.0 data interface and work with ImageFocus Alpha software

Besides capturing images and videos, the ImageFocus Alpha software allows measurements on still and live images and annotations on captured images. Compatible with Windows 10 and higher, both 32 and 64 bits configurations. Also compatible with Mac OS. PC requirements: Intel Core2 2.8 GHz or higher or equivalent, 2 GB memory, USB-3.0 port, 17 inch display. Free software can be downloaded from our website

MODELS	Number of pixels (MP)	Sensor and size (inches)	Pixels size (µm)	Exposure time	Resolutions	Max. frames (p/sec)	Color rendering	Dynamic range (dB)	S/N Ratio (dB)	Sensitivity V/lux-sec	Product number
sCMEX- 3	3.1	1/2.8" sCMOS	2.5 x 2.5	0.244 ~ 15000 ms	2048 x 1536 1920 x 1080	50 58	36 bits	--	--	0.15	DC.3000s
sCMEX- 6	6.3	1/1.8" sCMOS	2.5 x 2.5	0.244 ~ 15000 ms	3072 x 2048 1536 x 1024	30 38	36 bits	66.8	44.51	0.15	DC.6000s
sCMEX-20	20	1" sCMOS	2.4 x 2.4	0.264 ~ 15000 ms	5440 x 3648 2736 x 1824 1824 x 1246	15 50 60	36 bits	66.3	44.74	0.21	DC.20000s
sCMEX-32	32	1.15" sCMOS	2.3 x 2.3	0.1 ~ 15000 ms	5600 x 5600 2800 x 2800 1400 x 1400	8.1 30 30	36 bits	88	50	0.43	DC.32000s

The sCMEX cameras are supplied in a carton box with USB-2.0 cable, 30.0 and 30.5 mm to 23.2 mm conversion adapters for use with stereo microscopes, 1 mm/100 (10 µm/division) calibration slide. The DC.3000s is supplied with a 0.37x objective, the DC.6000s is supplied with a 0.5x objective, the DC.20000s and DC.32000s are supplied with a 1.0x adapter

HD AND HD-AUTOFOCUS CAMERAS

High definition 1080p and 4K

CMOS color cameras

These UHD-4K and HD cameras offer the perfect solution to modern microscopy where real-time images are needed. These HD image quality cameras can be used with biological, metallurgical or stereo microscopes

STAND-ALONE MODE

To use these cameras you do not need a computer or have any computer knowledge. Most camera settings are done automatically and therefore these cameras are very user- friendly. This results in faster, more flexible and compact working conditions. Simply connect the camera to a high definition dedicated 11.6" or 13" HD screen, TV-HD or HD-beamer with a HDMI input and the system is ready to go. The mouse driven built-in software of the camera enables captured images and recorded videos to be saved on the integrated SD memory card

Almost all HD cameras offer a full range of measuring functions on live and captured images

COMPUTER CONTROLLED MODE

Users who want more camera controls and more functions can also connect the camera to a computer and benefit from the extensive functions of the Euromex ImageFocus software. It runs on Windows 10 and higher, both 32 and 64 bits. Besides extended camera settings, the software can save images in JPG, TIFF or BMP formats and record videos in .avi format on the hard disk of the computer. The software offers different measurement functions on live and captured images and also full control over the camera parameters

HIGHLIGHTS

- **UHD 2160p, HD 1080p high definition color cameras**
- **Real-time images directly on TV, monitor or beamer**
- **Stand-alone or computer controlled mode**
- **Built-in mouse-driven software and SD memory card**
- **HDMI, USB-2.0/3.0**
- **GbE (Ethernet) (VC.3042)**
- **WiFi (VC.3042 and VC.3034)**
- **Autofocus model available**
- **Compatible with ImageFocus software**

- *VC.3036-HDS on stereo microscope*

- *VC.3034-HDS on the BioBlue*

PACKAGE CONTENT

MODELS	UHD-4K	HD-Ultra	HD-Lite	HD-Mini	HD-Mini +HDS	HD-Autofocus	HD-Pro
C-mount with objective	0.5x	0.37x	0.45x	0.37x	0.37x	0.5x	0.37x
Interface(s)	Digital HDMI, USB-2, WiFi	Digital HDMI, USB-2	Digital HDMI, USB-2	Digital HDMI	Digital HDMI	Digital HDMI, WiFi	Digital HDMI, USB-2
30 and 30.5 mm adapters	•	•	•	•	•	•	•
SD card	32 GB	16 GB	8 GB	32 GB	32 GB	32 GB	32 GB
Calibration slide 10mm/100	•	•	•	•	•	•	•
External power supply	12V 1A	12V 2A	12V 2A	12V 1A	12V 1A	12V 1A	12V 1A
Dimensions (w x d x h)	88 x 78 x 65	80 x 70 x 90	80 x 70 x 90	51ø x 60	50 x 50 x 60	81 x 65 x 78	81 x 65 x 78
Weight (grams)	480	440	280	50	130	500	500
Product number	**VC.3042**	**VC.3036**	**VC.3031**	**VC.3023**	--	**VC.3034**	**VC.3039**
With HD screen	13" **VC.3042-HDS**	11.6" **VC.3036-HDS**	11.6" **VC.3031-HDS**	--	13" **VC.3024-HDS**	13" **VC.3034-HDS**	13" **VC.3039-HDS**

ALL HD-CAMERAS

MODELS	UHD-4K	HD-Ultra	HD-Lite	HD-Mini	HD-Mini + HDS	HD-Autofocus	HD-Pro HDMI
Sensor	Sony 4K	Sony	Aptina	Sony	Sony	Sony	Sony
Format	1/1.8", HDTV 4K	1/2.8", HDTV 1080p	1/2.5", HDTV 1080p	1/2.8", HDTV 1080p	1/2.8", HDTV 1080p	1/1.9", HDTV 1080p	1/2.8", HDTV 1080p
Pixels	3840 x 2160 (1) HDMI 30 fps USB 30 fps	3264 x 1836 (1) 1920 x 1080 (2) HDMI 60 fps USB 30 fps	2592 x 1944 (1) 1920 x 1080 (2) HDMI 15 fps, USB 15fps	1920 x 1080 (1) 1920 x 1080 (2) HDMI 60 fps	1920 x 1080 (1) 1920 x 1080 (2) HDMI 60 fps	1920 x 1080 (1) HDMI 60 fps WiFi 25 fps	3840 x 2160 (1) 1920 x 1080 (2) HDMI 60 fps, USB 26 fps
Pixel size	2.0 x 2.0 (µm)	2.8 x 2.8 (µm)	2.2 x 2.2 (µm)	2.9 x 2.9 (µm)	2.9 x 2.9 (µm)	3.75 x 3.75 (µm)	1.45 x 1.45 (µm)
Video output	HDMI, USB-2.0, Ethernet, WiFi	HDMI, USB-2.0	HDMI, USB-2.0	HDMI	HDMI	HDMI, WiFi	HDMI, USB-C
Exposure	Automatic/ manual	Automatic/ manual	Automatic/ manual	Automatic/ manual	Automatic/ manual	Automatic/ manual	Automatic/ manual
White balance	Automatic/ manual/ROI	Automatic/ manual	Automatic/ manual	Automatic/ manual	Automatic/ manual	Automatic/ manual	Automatic/ manual/ROI
Sensitivity lux-sec	505 mV	510 mV	1000 mV	1300 mV	1300 mV	1120 mV (1/30s)	300 mV (1/30s)
Color rendering	36 bits	36 bits	24 bits	12 bits	12 bits	24 bits	24 bits
Signal/Noise	40.5 dB	55 dB	40.5 dB	42 dB	42 dB	50 dB	38 dB
Dynamic (dB)	60 dB	69 dB	60 dB	69 dB	69 dB	65 dB	66 dB
Interface	Digital HDMI, USB-2, Ethernet, WiFi	Digital HDMI, USB-2	Digital HDMI, USB-2	Digital HDMI	Digital HDMI	Digital HDMI, WiFi	Digital HDMI, USB-C
Camera buttons	on/off	on/off	on/off	- -	- -	on/off	on/off
Mounting	C-mount	C-mount	C-mount	C-mount	C-mount	C-mount	C-mount
Storage	32 GB SD card (max. 128 GB)	16 GB SD card (max. 32 GB)	8 GB SD card (max. 32 GB)	32 GB SD card (max.128 GB)	32 GB SD card (max.128 GB)	32 GB SD card (max. 128 GB)	32 GB SD card (max. 128 GB)
Software	ImageFocus Alpha	ImageFocus Plus	ImageFocus Plus	- -	- -	- -	ImageFocus Alpha
Software languages	15 (6)	13 (5)	13 (5)	- -	- -	15 (6)	15 (6)
External power supply	100-240 Vac to 12Vdc/1A	100-240 Vac to 12Vdc/2A	100-240 Vac to 12Vdc/2A	100-240 Vac to 12Vdc/1A	100-240 Vac to 12Vdc/1A	100-240 Vac to 12Vdc/2A	100-240 Vac to 12Vdc/2A
Relative humidity	30~80 %	45-85 %	45-85 %	30-80 %	30-80 %	45-85%	30~80%
Temperature Operation Storage	-10 – 50° C -20 to 60° C	0 – 60° C -20 to 70° C	0 – 60° C -20 to 70° C	-10 – 50° C -20 to 60° C	-10 – 50° C -20 to 60° C	–10-40° C -20°C to 60° C	-10~ 50° C -20°C to 60° C
Compatible	Win 10 + higher Mac OS, Linux	Win 10 + higher Mac OS	Win 10 + higher Mac OS	- -	- -	- -	Win 10 + higher Mac OS, Linux
Product number	**VC.3042 VC.3042-HDS (4)**	**VC.3036 VC.3036-HDS (4)**	**VC.3031 VC.3031-HDS (4)**	**VC.3023 - -**	**- - VC.3024-HDS (4)**	**VC.3034 VC.3034-HDS (4)**	**VC.3039 VC.3039-HDS (4)**

(1) capture mode
(2) live view
(3) USB-2.0 compatible
(4) model with attached HD screen, 1080p

(5) English, Chinese Simplified, Traditional Chinese, Thai, German, Italian, French, Korean, Japanese, Russian, Polish and portugese
(6) English, Catalan, Indonesian, Polish, Chinese Simplified, Traditional Chinese, Thai, German, Italian, French, Korean, Japanese, Russian, Turkish, Spanish

BUILT-IN SOFTWARE FEATURES (HDMI MODE)

MODELS	UHD-4K	HD-Ultra	HD-Lite	HD-Mini	HD-Mini + HDS	HD-Autofocus	HD-Pro HDMI
Image capturing (JPEG)	3840 x 2160	3261 x 1840	2592 x 1944	1920 x 1080	1920 x 1080	1920 x 1080	3840 x 2160
Video recording	3840 x 2160 MP4	1920 x 1080 AVI	1920 x 1080 AVI	1920 x 1080 MP4	1920 x 1080 MP4	1920 x 1080 ASF	1920 x 1080 MP4
Browse saved images	•	•	•	•	•	•	•
Browse saved video's	•	•	•	•	•	no	•
Mouse driven	•	•	•	•	•	•	•
Auto exposure	•	•	•	•	•	•	•
Exposure time	0.04 ~ 1000 ms	0.001s ~ 10 s	0.001s ~ 10 s	0.01 ~ 1000 ms	0.01 ~ 1000 ms	0.06 ~ 918 ms	0.04 ~ 1000 ms
Gain	•	•	•	•	•	•	•
RGB & white balance	•	•	•	•	•	•	•
Gamma	•	•	•	•	•	•	•
Sharpness	•	•	•	•	•	•	•
Noise reduction	3D algorithm	3D algorithm	3D algorithm	3D algorithm	3D algorithm	3D algorithm	3D algorithm
Saturation & contrast	•	•	•	•	•	•	•
Horiz. & vert. flip	•	•	•	•	•	•	•
Grids	cross/multi	cross/multi	multi	multi	multi	multi	User defined
Autofocus	- -	- -	- -	- -	- -	•	- -
Compare function	•	•	•	- -	- -	•	•
Measurement functions	captured & live images	captured & live images	- -	captured & live images	captured & live images	captured & live images	captured & live images
Line & free curve	•	•	- -	- -	- -	•	•
Polygon & rectangle	•	•	- -	- -	- -	•	•
Angle	•	•	- -	- -	- -	•	•
Circle 3 points	•	•	- -	- -	- -	•	•
Circle radius	•	•	- -	- -	- -	•	•
Export function	CSV	CSV, Txt	- -	- -	- -	CSV	CSV
Languages	10 (4)	9 (3)	9 (3)	10 (4)	10 (4)	10 (4)	10 (4)
Product number	**VC.3042 VC.3042-HDS**	**VC.3036 VC.3036-HDS**	**VC.3031 VC.3031-HDS**	**VC.3023 - -**	**- - VC.3024-HDS**	**VC.3034 VC.3034-HDS**	**VC.3039 VC.3039-HDS**

HDMI mode
(3) English, Chinese Simplified, Traditional Chinese, German, Italian, French, Korean, Japanese, Spanish
(4) English, Chinese Simplified, Traditional Chinese, Thai, German, Italian, French, Korean, Japanese, Russian

7 LIFE SCIENCE DIGITAL SOLUTIONS

COOLED CAMERAS

● *DC.20000i and DC.6000i*

Cooled color camera

with CCD or CMOS sensor

The Euromex 6 and 20 Megapixel Peltier cooled cameras are equipped with Peltier cooling elements that allow the camera to be used for fluorescence and other low light applications. These advanced and premium models are supplied with a USB-3.0 interface

ImageFocus Alpha software has specific functions for fluorescence like combining capture fluorescence images. Furthermore it allows capturing of images and videos, doing measurements and annotations, generating reports, live image stitching etc. Compatible with Windows 10 and higher, both 32 and 64 bits configurations. A Mac OS version is also available (with a few differences in features)

MODELS	Number of pixels (MP)	Sensor	Pixel size (µm)	Resolutions	Max. frames (p/sec)	USB-3	Dynamic range (dB)	S/N Ratio	Sensitivity @ 1/30 sec	Peltier cooling
DC.6000i	6	1" CCD	4.54 x 4.54	2748 x 2200 2748 x 1092	7.5 14	•	62.34	41.6	880 mV	•
DC.20000i	20	1" CMOS	2.4 x 2.4	5440 x 3648 4096 x 2160 2736 x 1824 1824 x 1216	5 10 15 30	•	66.3	41.74	462 mV	•

about

camera resolution and limits

Resolution of a camera system is the ability to reproduce object detail on screen. In practice it is depending on factors such as the good lighting of the object, the sensor pixel size and the capabilities of the optics. The smaller the object detail, the higher the required resolution

The highest frequency – expressed as line pair per mm that can be resolved – is 2 pixels or one line pair, the so-called **Nyquist frequency**

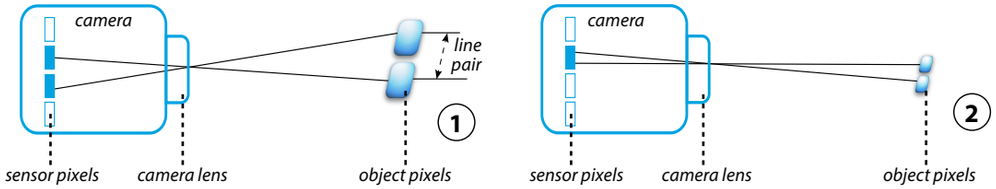

(1) *Space between objects is large enough to be detected by minimum two pixels of the camera sensor*

(2) *Space between objects is too small to be detected by minimum two pixels of the camera sensor*

THE LIMITING SENSOR RESOLUTION

(image space resolution) of a camera is commonly calculated as:

$$\left(\frac{1\ \mathrm{lp}}{2\ \mathrm{x}\ \mathrm{s}}\right)\ \mathrm{x}\ \left(\frac{1000\mu\mathrm{m}}{1\ \mathrm{mm}}\right)$$

whereby **s** = pixel size (in µm)
and expressed as line pair per mm (Lp/mm)

The formula shows that a sensor with smaller pixels will have higher image space resolution:

Pixel size	Image Space resolution
1.67	229 LP/mm
2.2	227 LP/mm
3.45	145 LP/mm
5.5	90 LP/mm

Considering the Euromex DC.18000-Pro 2/3 inch camera which is equipped with 4921 x 3684 pixels camera on a 8.6 x 6.6 mm large sensor

THE NYQUIST IMAGE SPACE RESOLUTION

can also be calculated as 1/2 x sampling pixels/mm (Lp/mm) or:

- **Horizontal**
  4921 / 8.6 = 572 (sampling pixels) x 0.5 = 286 Lp/mm
- **Vertical**
  3684 / 6.6 = 558 (sampling pixels) x 0.5 = 279 Lp/mm

The Nyquist object space resolution or the smallest detail that could be theoreticaly resolved is then equal to:
1000 mm / (286 Lp/mm) or 3.5 µm
However, taken into account the manufacturing limitations and inevitable optical aberrations, the real image space resolution can be calculated as:
1/2 x Kell factor (approx 0.70) x sampling pixels (Lp/mm) or:

- **Horizontal**
  4921 / 8.6 = 572 (sampling pixels) x 0.35 = 200 Lp/mm
- **Vertical**
  3684 / 6.6 = 558 (sampling pixels) x 0.35 = 195 Lp/mm

or approx. 1000 mm / 200 Lp/mm or 5 µm
In comparison, the by physics diffraction limited object space resolution (smallesy detail that ever can be observerd through the eyepieces of a optical compound microscope, is around 0.20 µm

ProPad

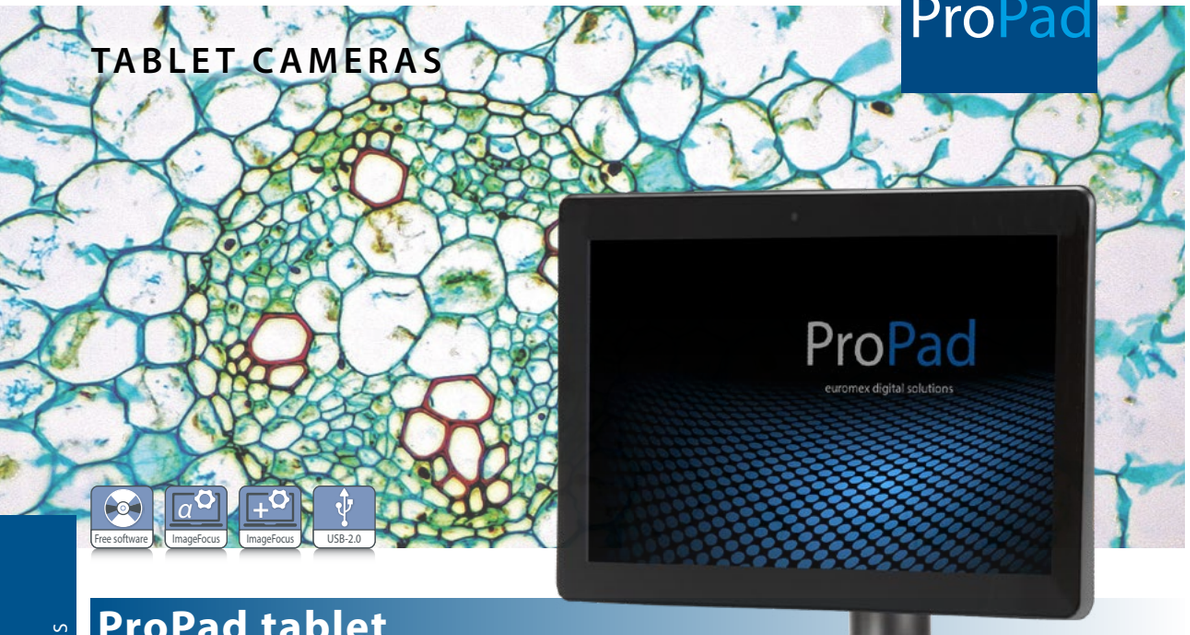

Free software | ImageFocus | ImageFocus | USB-2.0

ProPad tablet

with microscope camera and keyboard-docking station

The ProPad Full HD (1280x800) display reveals bright colors and crisp images.
The ProPad consists of a high quality microscope camera system and a fully detachable tablet running the latest ImageFocus version.
You can take it anywhere

Together with the included attachable keyboard, you can use it as a microscope imaging system, tablet and laptop. The keyboard connects to the tablet using magnets to provide a latchless docking solution that lets you smoothly remove and re-attach the keyboard to the ProPad

product information

SOFTWARE

ProPad-2, ProPad-5 and ProPad-12 are supplied with ImageFocus Plus. ProPad-WiFi is supplied with ImageFocus Alpha. The WiFi camera can also be operated through IOS and Android apps

HIGHLIGHTS

- **10.1" Tablet with microscope camera**
- **1280 x 800 pixels HD touch screen**
- **Windows 10 Home**
- **ImageFocus Plus software for PC**
- **ImageFocus Alpha for WiFi enabled PC and Android devices**
- **Tablet can be fully detached from camera**
- **Including keyboard**
- **The snap-on keyboard uses a magnetic docking system**

ProPad and keyboard-docking station

SPECIFICATIONS

Processor	Quad Core 1.92 GHz with HD graphics processor
Screen	10.1 inch, 1280 x 800 (WGXA) touchscreen, 16:10, LED backlight
Memory	2 GB DDR RAM, 2 MB cache
Storage	32 GB Flash HDD, micro SD/SDHC up to 64 GB
Webcam	2 MP, 1600 x 1200 pixels front and rear cameras
Connectivity	Micro USB 2.0, WiFi 802.11 b/g/n and Bluetooth 4.0
Audio	Stereo with 3.5 mm audio jack, internal microphone and speaker
Battery	Lithium
Housing	246.9 x 174.2 x 9.4 mm (tablet), 246.9 x 174.2 x 8.2 mm (keyboard)
Weight	588 grams (tablet), 551 grams (keyboard)
System	Windows 10 Home
Supplied with	Keyboard-docking station

Specifications can be changed by Euromex Microscopen bv without prior notice

MODELS	Camera (MP)	Sensor size	Resolution	Pixels size (µm)	ADC	Color rendering	Dynamic (dB)	Sensitivity V/lux-sec	Interface	Product number
ProPad-2	2.1	1/2.9"	1920 x 1080	2.8 x 2.8	12 bits	24 bits	- -	0.51	2.0	PP.2000f
ProPad-5	5.1	1/2.8"	2592 x 1920	2.0 x 2.0	12 bits	24 bits	72 dB	2.0	2.0	PP.5000f
ProPad-12	12.0	1/2.3"	4072 x 3176	1.33 x 1.33	8 bits	24 bits	60 dB	- -	2.0	PP.12000f
ProPad-WiFi	5.0	1/2.5"	1280 x 720	2.2 x 2.2	12 bits	24 bits	61 dB	1.0		PP.5000-WiFi

All ProPad models are supplied with a C-mount objective that fits the standard 23.2 mm trinocular tubes. The PP.2000f, PP.5000f and PP.12000f are supplied with ImageFocus Plus software. The PP.5000-WiFi is supplied with ImageFocus Alpha.
Only suitable for straight photo tubes

LIFE SCIENCE
DIGITAL SOLUTIONS
7

SOFTWARE

The software is compatible with all cameras mentioned in table below. Besides live imaging the software captures images in various formats and video in .avi format

IMAGE FOCUS 4
DC.1300c

IMAGE FOCUS PLUS	
DC.2000f	VC.3036
DC.5000f	VC.3031
DC.12000f	

IMAGE FOCUS ALPHA	
DC.3000-Pro	DC.5000-WiFi
DC.5000-Pro	DC.3000s
DC.10000-Pro	DC.6000s
DC.18000-Pro	DC.20000s
VC.3039	VC.3042

IMAGE STITCHING

Image stitching is the process of combining multiple images with overlapping fields of view to produce one image

EXTENDED DEPTH OF FOCUS

"The extended depth of focus" function in the ImageFocus Alpha software or "stacking software, allows to combine a number of digital images of a object, focused at different focus planes, into one final image with much greater depth of field (see illustration below)

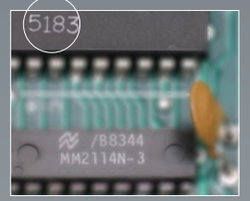

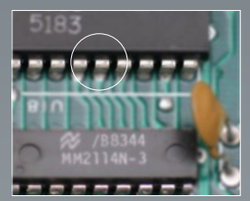

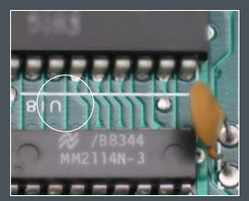

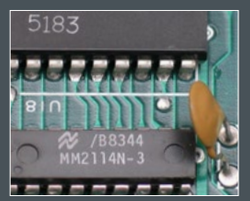

FREE UPDATES AVAILABLE ON EUROMEX.COM

ImageFocus Plus

software

ImageFocus Plus has a wide range of functions:
Measurements on still and live image
Extended depth of focus and stitching on still and live image (only with VC.3036 and VC.3031 cameras)
Images can be saved in .jpg, .tif, .bmp or .dicom formats as well as .avi and mpeg-4 format videos
The brightness, contrast and saturation of captured images can be adjusted
Camera parameters for exposure time, white balance and color control are easily accessible
The software also has specific functions for fluorescence such as combining captured fluorescence images
Compatible with Windows 10 and higher, both 32 and 64 bits configuration. A Mac OS version is also available
PC requirements: Intel Core2 2.8 GHz or higher or equivalent, 2 GB memory or more, 17" screen

ImageFocus Plus software features English, German, French, Dutch, Spanish and Russian

downloads

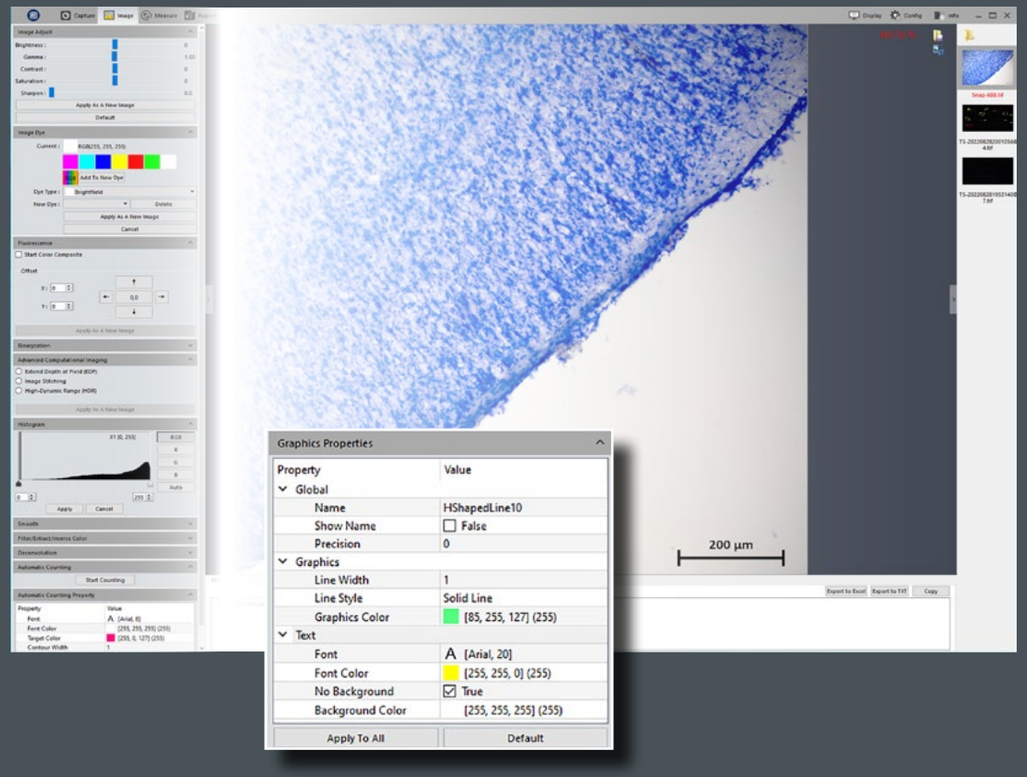

ImageFocus Alpha
software

ImageFocus Alpha has a wide range of functions:

- Measuring, segmentation & counting, stichting of images, extended depth of focus, etc
- Images can be saved in .jpg, .tif, .bmp or .dicom formats as well as .avi format videos
- The brightness, contrast and saturation of captured images can be adjusted
- Camera parameters for exposure time, white balance and color control are easily accessible
- The software also has specific functions for fluorescence such as combining captured fluorescence images
- Compatible with Windows 10 and higher, both 32 and 64 bits configuration. A Mac OS version is also supplied (with a few differences in features)
- PC requirements: Intel Core2 2.8 GHz or higher or equivalent, 2GB memory or more, 17" screen

One language can be selected during initial installation of the ImageFocus Alpha software English, Catalan, French, German, Indonesian, Italian, Japanese, Korean, Polish, Russian, Simplified Chinese, Spanish, Thai, Traditional Chinese, Turkish

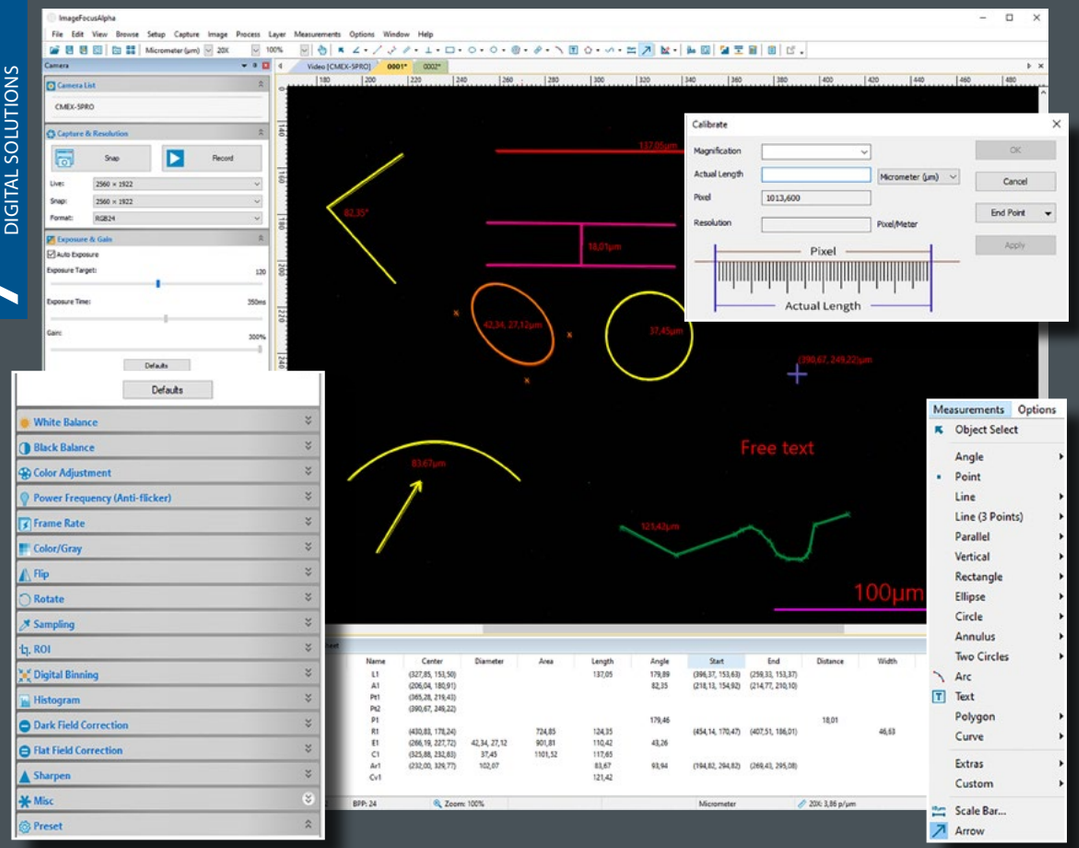

ImageFocus 4
software

ImageFocus 4 has a wide range of functions:

- Measurements can be done on still and live image
- Images can be saved in .jpg, .tif, .or .bmp formats as well as .avi format videos
- The brightness, contrast and saturation of captured images can be adjusted
- Camera parameters for exposure time, white balance and color control are easily accessible
- The software also has specific functions for fluorescence such as combining captured fluorescence images
- Compatible with Windows 10 and higher, both 32 and 64 bits configuration. A Mac OS Light version is also available for capturing images*
- PC requirements: Intel Core2 2.8 GHz or higher or equivalent, 2GB memory or more, 17" screen

** Mac version not available for VC Series*

One language can be selected during initial installation of the ImageFocus 4 software: English, German, French, Dutch, Spanish and Russian

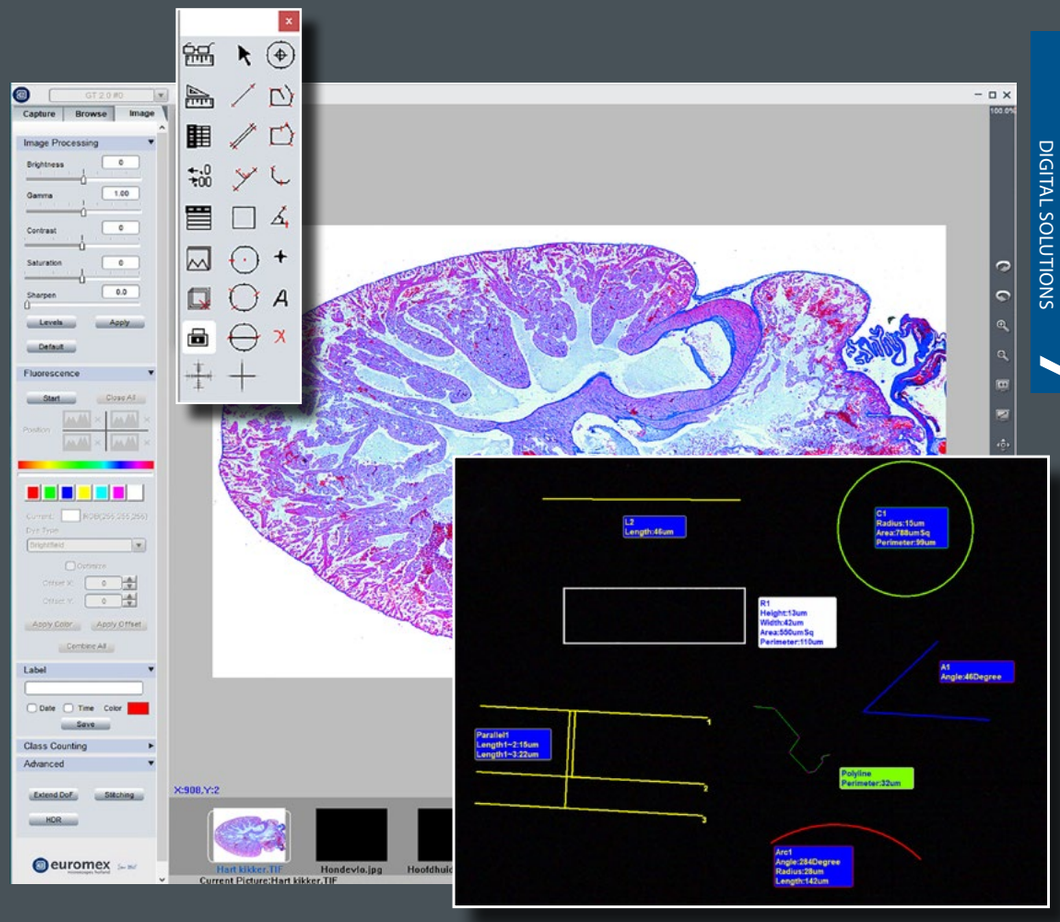

ADAPTERS

FOR ALL MICROSCOPE CAMERAS

adapters

● AE.5130

NZ.9850 ●

adapter guide

microscope and camera

Most Euromex cameras are supplied with a photo port c-mount adapter to connect it to any Euromex trinocular microscope*. Monocular microscopes require the removal of the eyepiece so that the camera can be fitted into the 23.2 mm tube. Binocular microscopes require the removal of an eyepiece plus an additional mechanical adapter

** Except for the Oxion, Oxion Inverso and Delphi-X Inverso series. These microscopes need an additional adapter. See next page*

Should you want to connect one of our cameras to another microscope brand, see adapter references below:

MODELS	1/3 inch camera	1/2 inch camera	2/3 inch camera	1 inch camera
Leica [1]	AE.9835-L (0.35x)	AE.9855-L (0.55x)	AE.9870-L (0.70x)	AE.9810-L (1x) AE.9812-L (1.2x)
Olympus [2]	AE.9835-O (0.35x)	AE.9850-O (0.50x)	AE.9863-O (0.63x) AE.9880-O (0.80x)	AE.9810-O (1x) AE.9812-O (1.2x)
Zeiss [3]	AE.9835-Z (0.35x)	AE.9850-Z (0.50x)	AE.9865-Z (0.65x)	AE.9810-Z (1x) AE.9812-Z (1.2x)
Zeiss ZA [4]	- -	AE.9850-ZA (0.50x)	AE.9863-ZA (0.63x) AE.9880-ZA (0.80x)	AE.9810-ZA (1x) AE.9812-ZA (1.2x)
Nikon [5]	AE.9835-N (0.35x)	AE.9855-N (0.55x)	AE.9870-N (0.70x) AE.9880-N (0.80x)	AE.9810-N (1x) AE.9812-N (1.2x)

[1] Leica DM, 35 mm to 25.4 mm C-mount, stainless steel
[2] Olympus CX , CX2, BX, BX2, IX, MX, GX, SZX, STM, 42 mm to 25.4 mm C-mount, anodized aluminum
[3] Zeiss PrimoStar, PrimoStar Vert, 30 mm to 25.4 mm C-mount, anodized aluminum
[4] Zeiss 60N-C, 60N-T2 photo ports of Axio examiner, Axio Imager, Axio Lab, Axio Observer, Axio Scope, Axio Zoom, Stemy 508 and SteREO Discovery
[5] Nikon E100, E200, 50i, 55i, 80i, 90i, Ni series, Ti Series, SMZ800,SMZ1000, SMZ15000, 38 mm to 25.4 mm C-mount, stainless steel

● AE.9835-L

23.2 MM PHOTO PORT C-MOUNT ADAPTERS

Suitable for all Ø 23.2 mm (photo) tubes

DC.1324 C-mount adapter with 0.45x objective for 1/2" camera
DC.1353 C-mount adapter with 0.37x objective, fixed focal length and short barrel*. For 1/3 camera
DC.1355 C-mount adapter with 0.50x objective, fixed focal length and short barrel*. For 1/2" camera
DC.1357 C-mount adapter with 0.75x objective, fixed focal length and short barrel*. For 2/3" camera
DC.1359 C-mount adapter with 1x lens, fixed focal length and short barrel, for standard 23.2 mm tube and 1 inch camera
DC.1330 30 mm to 23.2 mm conversion adapters
DC.1335 30.5 mm to 23.2 mm conversion adapters

** for increased light efficiency*

DIGITAL SLR ADAPTERS

Digital singe lens reflex camera with a APS-C sensor can be mounted on a standard 23.2 mm trinocular tube
Choose the universal DC.5130 adapter with built-in 2x objective, together with a brand-specific T-2 adapter

AE.5130 Universal SLR camera adapter for 23.2 mm tube with built-in 2x magnification lens. Needs T2 adapter
AE.5025 T2 adapter for Nikon D digital SLR cameras
AE.5040 T2 adapter for Canon EOS digital SLR cameras

Other T2 adapters on request

● DC.1355

● DC.1330 / DC.1335

● DC.1324

● AE.5130

● AE.5120-2

PHOTO PORT ADAPTERS

Suitable for Euromex microscopes with a photo port such as Oxion, NexiusZoom, StereoBlue, Delphi-X Observer and Delphi-X Inverso

AE.5120-2 Standard 23.2 mm diameter tube for Oxion photo port
DI.9840 C-mount with high resolution 0.40x objective for 1/3 inch C-mount camera
DI.9850 C-mount with high resolution 0.50x objective for 1/2 inch C-mount camera
DI.9810 C-mount with 1x magnification for C-mount camera
DX.9835 C-mount with high resolution relay 0.35x objective for 1/3 inch C-mount camera
DX.9850 C-mount with high resolution relay 0.50x objective for 1/2 inch C-mount camera
DX.9863 C-mount with high resolution relay 0,63x objective for 2/3 inch C-mount camera
DX.9810 C-mount with 1 magnification for C-mount camera
NZ.9850 C-mount adapter with 0.5x objective for NexiusZoom microscopes and 1/2" cameras
OX.9810 C-mount adapter with 1x magnification for 1" cameras
OX.9833 C-mount adapter with 0.33x objective for Oxion microscopes and 1/3" cameras
OX.9850 C-mount adapter with 0.5x objective for Oxion and Oxion Inverso microscopes and 1/2" cameras
SB.9850 C-mount adapter with 0.5x objective for StereoBlue microscopes and 1/2" cameras

7 LIFE SCIENCE DIGITAL SOLUTIONS

accessories

accessories

for microscopy

product information

ILLUMINATION SOLUTIONS • PAGE 370
DISSECTION INSTRUMENTS • PAGE 378
DISSECTION KITS • PAGE 380
MICROSCOPE PREPARED SLIDES • PAGE 382
DISPOSABLES • PAGE 394
STAINS • PAGE 395

illumination solutions

For stereo microscopes choosing the right illumination is essential to obtain a perfect image with maximum resolution. LED light sources have a much longer life span, less energy consumption and less heating than halogen light sources

The major advantage of LED illumination is the constant light spectrum at all light intensity levels. These light sources are suitable for all kinds of applications in industry, life sciences and materials sciences

illumination solutions

for stereo microscopy

education university life science industry

ILLUMINATION SOLUTIONS

The right light source solution can enhance and reveal the details you want to examine

Illumination solutions

MULTIFUNCTIONAL 150 W HALOGEN OR 30 W POWER-LED • COLD LIGHT SOURCE

A powerful multifunctional 150 W halogen (LE.5211) and 30 W PowerLED cold light source is ideal for the advanced requirements of numerous applications in life and materials science. The intensity is adjustable and has a built-in forced air cooling. The LE.5211 and LE.5211-LED light sources require a light fiber conductor such as the single LE.5213, dual LE.5214, triple LE.5215 or the LE.5239 ring light fiber conductors. The LE.5213, LE.5214 and LE.5215 light conductors can be equipped with a lens holder (LE.5222) and a focusing lens (LE.5224)

LE.5211-LED/LE.5211 + LE.5214 +2x LE.5222 + 2x LE.5224

Power	150 W halogen	30 W PowerLED (equivalent to 120 W halogen)
Luminous flux	21,000 lux max [1)]	30,000 lux max.*
Color temperature	3,000 K	6,500 K
Operating voltage	100 and 240 V AC / 12 V DC (50/60 Hz)	100-240 V AC / 12 V DC (50/60 Hz)
Dimensions	(h) 150 x (w) 150 x (d) 230 mm	150 (h) x 150 (w) x 230 mm (d)
Weight	3,9 kg	2.8 kg
Model	**LE.5211**	**LE.5211-LED**

** with LE.5214 dual arm light conductor*

MULTIFUNCTIONAL 100 W HALOGEN • COLD LIGHT SOURCE

This popular multifunctional cold light source contains a 100 W halogen light source. The intensity is adjustable and it has a built-in forced air cooling. The LE.5210 light source requires a light fiber conductor such as the single LE.5213, dual LE.5214, triple LE.5215 or the LE.5239 ring light fiber conductors. The LE.5213, LE.5214 and LE.5215 light conductors can be equipped with a lens holder (LE.5222) and a focusing lens (LE.5224). Ideal for all kinds of applications in Life and Materials sciences, various industrial applications and for stereo microscopy

Power	100 W halogen
Luminous flux	20,000 lux max.*
Color temperature	3,000 K
Operating voltage	100 and 240 V AC / 12 V DC (50/60 Hz)
Dimensions	115 (h) x 320 (w) x 215 mm (d)
Weight	3.8 kg
Model	**LE.5210**

** with LE.5214 dual arm light conductor*

COMPACT SINGLE 20 W LIGHT SOURCE

Compact cold light source with single 40 cm, 6 mm diameter fiber light conductor. Equipped with a 20 W halogen lamp. Light intensity is factory preset and can not be adjusted

Power	20 W halogen
Color temperature	3,000 K
Operating voltage	110 V AC and 230 V AC versions (50/60 Hz)
Dimensions	80 (h) x 110 (w) x 165 mm (d)
Weight	2.0 kg
Model	**LE.5209**

ECONOMICAL AND COMPACT DUAL 3 W LED • LIGHT SOURCE

Economical dual LED intensity adjustable light source with two 44 cm flexible gooseneck arms, each mounted with a 3 W LED. Ideal for applications in life and materials sciences, various industrial applications and for stereo microscopy

Power	2x 3 W LED = 2x 28 W halogen equivalent
Luminous flux	25,000 lux
Color temperature	6,500 K
Operating voltage	100-240 V AC / 5 V DC (50/60 Hz)
Dimensions	70 (h) x 106 (w) x 140 mm (d)
Weight	1.5 kg
Model	**LE.5207**

144 LEDS RING LIGHT SOURCE • LE.1973

LED ring light source with high illuminance and segment illumination for all kinds of demanding applications

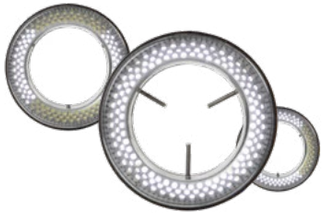

Ring illumination	144 LEDs with adjustable intensity and 4 segment illumination
Color temperature	6,500 K
Illuminance	23,000 lux at 100 mm distance
working distance:	from 55 to 200 mm
Mounting	for stereo head with diameter from 25 to 61 mm
Power supply	100-240 V AC / 12 V DC (50/60 Hz) / 4.5 Watt
External diameter	100 mm
Model	**LE.1973**

COMPACT 72 LEDS • LE.1974

Compact 20,000 lux LED ring light source

Ring illumination	72 LEDs with adjustable intensity and 4 segment illumination
Color temperature	6,500 K
Illuminance	21,000 lux at 100 mm distance
working distance:	from 50 to 180 mm
Mounting	for stereo head with diameter from 25 to 61 mm
Power supply	100-240 V AC / 12 V DC (50/60 Hz) / 4 Watt
External diameter	100 mm
Model	**LE.1974**

PROFESSIONAL HIGH POWER LED RING LIGHT SOURCES • LE.1980/ LE.1981

LED ring light source with maximum illuminance and metal construction for professional usage. With adjustable intensity, optional power supply/segment controller, diffuser, polarizers and Fresnel focusing lenses for perfect illumination of objects

LE.1992 *LE.1993*

MODELS	Number of LEDs	Color temperature	Illuminance	For mounting diameters	Internal/external diameter	Required power supply/ controller
LE.1980	48	6,000 K	17,000 lux	from 30 to 66 mm	45/90 mm	LE.1992 Analog controller
LE.1981	48	6,000 K	17,000 lux	from 30 to 66 mm	45/90 mm	LE.1993 Digital segments controller

PROFESSIONAL HIGH POWERLED RING LIGHT SOURCES LE.1990/ LE.1991

LED ring light source with maximum illuminance and metal construction for professional usage. With adjustable intensity, optional power supply/segment controller, diffuser, polarizers and Fresnel focusing lenses for perfect illumination of objects

LE.1992 *LE.1993*

MODELS	Number of LEDs	Color temperature	Illuminance	For mounting diameters	Internal/external diameter	Required power supply/ controller
LE.1990	72	6,000 K	21,000 lux	from 40 to 66 mm	60/110 mm	LE.1992 Analog controller
LE.1991	72	6,000 K	21,000 lux	from 40 to 66 mm	60/110 mm	LE.1993 Digital segments controller

ILLUMINATION STATION LE.5212

Light source station with multiple power supply connections for two self-sustaining gooseneck-type guides, one ring light and one transmitted stage illumination. For stand-alone usage or mounted on stereo microscope pillar stands with diameters up to 44 mm or with 35- and 25-mm pole mounting adapter rings

Each self-sustaining gooseneck-type LED guide is equipped with a 3-lens focusing head and has a length of 56 cm
White 6,500 K LED ring light generating with 60 LEDs up to 24,000 Lux. Mounting diameters from 21 to 61 mm
Transmitted light stage illumination with a 6,500 K white LED generating up to 8,000 Lux with 42 LEDs. Stage diameter 94.5 and 15 mm thick

MODELS	3 W gooseneck guide LED	4 W white LED ring light	2 W white LED transmitted light stage
LE.5212	White LED, 6,500 K	•	•
LE.5212-365	365 nm, monochrome	•	•
LE.5212-395	395 nm, monochrome	•	•
LE.5212-420	420 nm, monochrome	•	•

FLUORESCENCE 40 HZ RING LIGHT SOURCE FOR Z SERIES STEREO ZOOM MICROSCOPES

Suitable for Z series stereo zoom microscopes, except for ZE.1659. Integrated 240 V AC power supply

Ring illumination	Fluorescent 40 kHz ring, fixed intensity
Color temperature	5,200 K
Illuminance	6,500 lux at 100 mm distance
working distance:	35-160mm
Mounting	48 mm with adapter for ZE series microscopes
Power supply	230-250 V
External diameter	100 mm
Model	**LE.1863**

ACCESSORIES AND SPARE PARTS

FOR LE.5210, LE.5211 AND LE.5211-LED COLD LIGHT SOURCES

FIBER LIGHT CONDUCTORS

LE.5213 Single arm fiber light conductor, gooseneck self-sustaining, 50 cm long, 4 mm diameter

LE.5214 Dual arm fiber light conductor, gooseneck self-sustaining, 50 cm long, 4 mm diameter

LE.5215 Triple arm fiber light conductor, gooseneck self-sustaining, 50 cm long, 4 mm diameter

LE.5219 Dual arm fiber light conductor, gooseneck self-sustaining, 70 cm long, 4 mm diameter

LE.5239 Slit ring-shaped fiber light conductor 60 cm long, 8 mm diameter

LE.5241 Flexible fiber light conductor, curved 90°, 60 cm long, 4 mm diameter

LE.5216 Single arm flexible fiber light conductor, 100 cm long, 4 mm diameter

LE.5235 Dual arm flexible fiber light conductor, 100 cm long, 4 mm diameter

LE.5217 Triple arm flexible fiber light conductor, 100 cm long, 4 mm diameter

LE.5218 Single arm flexible fiber light conductor, 100 cm long, 8 mm diameter

LE.5220 Single arm flexible fiber light conductor, 200 cm long, 8 mm diameter

LE.5222 Focusing head for focusing lens LE.5224, LE.5228 or filters LE.5229 and LE.5231 (for fiber light conductors)

LE.5224 Focusing lens. Requires LE.5222 or LE.5228 for mounting on LE.5213, LE.5214 and LE.5215

LE.5228 Focusing head with iris diaphragm (for fiber light conductors)

LE.5231 Conversion KB12/80B filter

HALOGEN BULBS AND FUSES

SL.5219 Halogen 100 W 12 V bulb with reflector (50 hrs nominal), MR16 fits LE.5210

SL.5230 Halogen 100 W 12 V 'Long Life' bulb (1,000 hrs nominal), MR16 fits LE.5210

SL.5235 Halogen 150 W 15 V bulb (50 hrs nominal), MR16 fits LE.5211

SL.5240 Halogen 150 W 15 V 'Long Life' bulb (500 hrs nominal), MR16 fits LE.5211

FOR LE.1980 AND LE.1981

LE.1984-050 Fresnel lens, WD from 40 to 80 mm

LE.1984-100 Fresnel lens, WD from 80 to 150 mm

LE.1984-200 Fresnel lens, WD from 150 to 240 mm

LE.1984 Diffusing filter, for WD from 40 to 300 mm

LE.1985 Glass protection window

LE.1987 Polarizing filter

LE.1888 Rotatable polarizing filter

LE.1992 100-230 V power supply analog controller. Intensity adjustable from 0-100%

LE.1993 100-230 V power supply digital segment controller. Intensity adjustable from 0-100%

FOR LE.1990 AND LE.1991

LE.1994-050 Fresnel lens, WD from 40 to 80mm

LE.1994-100 Fresnel lens, WD from 80 to 150 mm

LE.1994-200 Fresnel lens, WD from 150 to 240 mm

LE.1994 Diffusing filter, for WD from 40 to 300 mm

LE.1995 Glass protection window

LE.1997 Polarizing filter

LE.1998 Rotatable polarizing filter

LE.1992 100-230 V power supply analog controller. Intensity adjustable from 0-100%

LE.1993 100-230 V power supply digital segment controller. Intensity adjustable from 0-100%

FOR LE.5212

LE.5260 Interchangeable self-sustaining gooseneck-type guide with a white 6,500 K high-power LED for NZ.9018, LE.5207 or LE.5212, 1 pc (A)

LE.5261 Interchangeable self-sustaining gooseneck-type guide with a 365 nm high-power UV-LED for NZ.9018, LE.5207 or LE.5212, 1 pc (B)

LE.5262 Interchangeable self-sustaining gooseneck-type guide with a 395 nm high-power Violet-LED for NZ.9018, LE.5207 or LE.5212, 1 pc (C)

LE.5263 Interchangeable self-sustaining gooseneck-type guide with a 420 nm high-power Violet-LED for NZ.9018, LE.5207 or LE.5212, 1 pc (D)

LE.5264 Polarization filter, screw on type for Interchangeable self-sustaining gooseneck-type guides for NZ.9018, LE.5207 or LE.5212, 1 pc

FOR LE.1863

SL.1864 Spare fluorescence lamp

WD = working distance

Fresnel lens

Polarizing filter

Dual arm fiber light conductor

Triple arm fiber light conductor

PREPARATION ACCESSORIES

Euromex offers the right tools for sample preparing. Before using a microscope good samples are essential to get the most accurate results

product information

dissection instruments

PB.5050 Dissecting needle, straight tip with plastic handle

PB.5054 Dissecting needle, lancet-shaped with plastic handle

PB.5056 Blunt-pointed probe, Ø 2 mm, length 140 mm

PB.5058 Section lifter with wooden handle

PB.5060 Serrated thumb dressing forceps, length 13 mm

PB.5062 Dressing forceps with blunt tips, length 13 cm

PB.5064 Dressing forceps with blunt tips, length 20 cm

PB.5067 Dissecting forceps with sharp tips, length 13 cm

PB.5069 Dissecting forceps with finely curved sharp tips, length 13 cm

PB.5077 Cover glass forceps, length 11 cm

SCISSORS AND BLADES

PB.5080 Dressing scissors with blunt/sharp tip, length 14 cm

PB.5084 Dissecting scissors, sharp tips, length 11 cm

PB.5092 Scalpel with blunt tip, length 15 cm

PB.5094 Scalpel handle no. 4 (for blades PB.5095 and PB.5096)

PB.5095 Scalpel blades with sharp tip, 5 pieces per set

PB.5096 Scalpel blades with blunt tip, 5 pieces per set

PB.5103 Strop, double sided for stropping of scalpels, microtome knifes. Includes stropping paste

PB.5105 Razor plano/concave, for sectioning. With plastic handle

PB.5106 Microtome knife plano/concave. With fixed handle, length 17 cm

HANDHELD MICROTOMES

MT.5500 Cylinder microtome. Circular stage Ø 70 mm with flat black glass top. Height adjustable with micrometer division 0.01 mm. Complete with plano-concave knife PB.5106 and wooden cabinet

MT.5501 Cylinder microtome. Identical to MT.5500 but without knife and wooden cabinet

MT.5503 Handheld microtome. Box type with table clamp and razor blade holder. Thickness adjustment by 0.025 mm intervals. Complete with wooden cabinet

PREPARATION ACCESSORIES

product information

dissection kits

4-PC DISSECTION KIT PB.5110 IN IMITATION LEATHER CASE

Kit with straight dissecting needle (PB.5050), dissecting forceps (PB.5067), dissecting scissors (PB.5084) and scalpel (PB.5092). Supplied with imitation leather case

PB.5110

6-PC DISSECTION KIT PB.5111 IN PLASTIC CASE

Kit with straight dissecting needle (PB.5050), lancet-shaped dissecting needle (PB.5054), dissecting forceps (PB.5067), dissecting scissors (PB.5084), scalpel handle no. 4 (PB.5094) and blades (PB.5096). Supplied with plastic case

PB.5111

10-PC DISSECTION KIT PB.5112 IN IMITATION LEATHER CASE

Kit with two straight dissecting needles (PB.5050), lancet-shaped dissecting needle (PB.5054), dressing forceps (PB.5062), dissecting forceps (PB.5067), scissors (PB.5080), dissecting scissors (PB.5084), two scalpels (PB.5094), five scalpel blades with straight tip and five blades with blunt tip (PB.5095/PB.5096). Supplied with imitation leather case

PB.5112

9-PC DISSECTION KIT PB.5114 IN WOODEN CASE

Kit with two straight dissecting needles (PB.5050), lancet-shaped dissecting needle (PB.5054), dressing forceps (PB.5062), dissecting forceps (PB.5067), scissors (PB.5080), dissecting scissors (PB.5084), two scalpels (PB.5094), five scalpel blades with straight tip and five blades with blunt tip (PB.5095/PB.5096). Supplied with wooden cabinet

PB.5114

6-PC DISSECTION KIT FOR KOI FISH PB.5115 IN PLASTIC CASE

Dissecting set for Koi fish. Consisting of plastic box with forceps with 1 x 2 points (PB.5060), forceps blunt points, 13 cm (PB.5062), scissors, blunt/ sharp points, 14 cm (PB.5080), microscope scissors, sharp points, 11 cm (PB.5084), blunt-pointed probe (PB.5056), scalpel handle no. 4 (PB.5094), five scalpel blades with straight tip and five blades with blunt tip (PB.5095/PB.5096)

PB.5115

PROFESSIONAL SLIDE PREPARATION KIT PB.5125 IN PLASTIC DELUXE CASE

Kit with three prepared slides, 50 microscope slides (PB.5150) and 100 cover glasses (PB.5165). Two microscope slides with cavity. Canada balsam, dissecting needle (PB.5050 and PB.5054). Dissecting forceps (PB.5067), dissecting scissors (PB.5084) and scalpel (PB.5092). Supplied with plastic deluxe case

PB.5125

MICROSCOPE PREPARED SLIDES

product information

Euromex offers teachers, students and microscopy amateurs a wide range of quality micro-slides, which can be used immediately in biology classes as introduction to histology, zoology and botany

sets with 25 slides for education

histology, zoology and botany set

PB.5211 FOR EDUCATION

Set with 25 microscopy slides for education: histological samples of mammals, zoology and botany.
All microscope slides are supplied in a plastic box for 25 slides. The set contains:

HISTOLOGY

SH.1011 Hard bone grinding, human, section
SH.1045 Skeletal muscle, dog, l.s and c.s
SH.1072 Skin section through hair follicle, human
SH.1078 Stratified flat epithelium, dog, section
SH.1150 Blood smear, human, Giemsa stained

ZOOLOGY

SZ.1510 Amoeba proteus, w.m
SZ.1580 Hydra with bud, w.m
SZ.1640 Lumbricus - earthworm, c.s
SZ.1655 Daphnia sp., water flea, w.m
SZ.1715 Musca domestica, house fly, mouth parts
SZ.1717 Musca domestica, house fly, leg with clinging pads
SZ.1719 Musca domestica, house fly, wing w.m

BOTANY

SB.2006 Allium cepa, onion, scale epidermis, w.m
SB.2009 Allium cepa, onion, mitosis root tip, l.s
SB.2055 Zea mays, corn, stem, cs
SB.2060 Triticum aestivum, wheat, stem, c.s
SB.2070 Helianthus, sunflower, young stem, c.s
SB.2130 Helianthus, sunflower, leaf, c.s
SB.2205 Monocot/dicot flower, zea mays/ranunculus, c.s
SB.2212 Lilium, lily, ovary, c.s
SB.2335 Mnium, w.m
SB.2355 Rhizopus nigricans,bread mold, developed sporangia
SB.2377 Diatoms, w.m
SB.2381 Spirogyra sp., vegetative mass, w.m
SB.2405 Dental plaque, smear

histology, zoology and botany set

PB. 5212 FOR EDUCATION

Set with 25 microscopy slides for education: histological samples of mammals, zoology and botany.
All microscope slides are supplied in a plastic box for 25 slides. The set contains:

HISTOLOGY

SH.1001 Loose connective tissue, rabbit
SH.1005 Hyaline cartilage rabbit, section
SH.1160 Lymph node, rabbit, section
SH.1230 Small intestine, dog, c.s
SH.1250 Liver, pig, section
SH.1430 Cerebrum section, dog

ZOOLOGY

SZ.1520 Paramecium, w.m
SZ.1625 Schistosoma Japonicum, fluke eggs, bilharziose
SZ.1630 Taenia, tapeworm cattle, mature proglottid, w.m
SZ.1635 Ascaris megalocephala, horse roundworm, female + male, c.s
SZ.1708 Apis mellifica, honey bee, mouth parts
SZ.1725 Periplaneta, cockroach, mouth parts of chewing type
SZ.1730 Pieres brassicae, cabbage-white butterfly, mouth, w.m
SZ.1750 Periplaneta, cockroach, spiracle of insect, w.m

BOTANY

SB.2095 Monocot/dicot stem, zea mays/pumpkin, c.s
SB.2105 Hibiscus, young stem, c.s
SB.2110 Cucurbita, pumpkin, stem, l.s
SB.2115 Sambucus, elderberry or Morus Alba, mulberry, stem with cork cambium + lenticels, c.s
SB.2160 Lilium, lily leaf, c.s
SB.2225 Zea mays, corn, corn seed with embryo, l.s
SB.2235 Pirus, pear, stone cells, section
SB.2240 Triticum aestivum, wheat, kernel, l.s
SB.2305 Cyrtomium, holly fern, c.s of rhizom
SB.2310 Cyrtomium, holly fern, section
SB.2386 Oscillatoria, blue-green algae

USED ABBREVIATIONS	
c.s	cross section
l.s	longitudinal section
w.m	whole mount

histology, zoology and botany set

PB. 5213 FOR EDUCATION

Set with 25 microscopy slides for education: histological samples of mammals, zoology and botany.
All microscope slides are supplied in a plastic box for 25 slides. The set contains:

HISTOLOGY

SH.1006 Elastic cartilage, rabbit
SH.1040 Smooth muscle, teased preparation, rabbit, l.s+c.s
SH.1110 Lung with injected blood vessels, rabbit, c.s
SH.1130 Artery and vein, rabbit, c.s
SH.1410 Nerve, rabbit, c.s and l.s

ZOOLOGY

SZ.1535 Euglena virides, a flagellate with eyespot
SZ.1586 Hydra, w.m of tentacles
SZ.1620 Schistosoma Japonicum, female, w.m
SZ.1705 Apis mellifica, honey bee, posterior leg, w.m
SZ.1733 Pieres brassicae, cabbage-white butterfly, part of wing
SZ.1738 Locusta, grasshopper, mouth parts, w.m
SZ.1780 Insects - four types of legs, honey bee, house fly, house mosquito, spider
SZ.1877 Rana sp, frog, blood smear

BOTANY

SB.2011 Zea mays, corn root tip with hairs, l.s
SB.2020 Helianthus, sunflower, old root, c.s
SB.2025 Monocot/dicot plant roots, zea mays/helantius, c.s
SB.2040 Solanum tuberosum, potato, starch grains
SB.2075 Tilia, lime tree, one year stem, c.s
SB.2091 Hydrilla stem, c.s
SB.2100 Pelargonium hortorum, geranium, stem c.s
SB.2337 Mnium, antheridial branch, l.s
SB.2339 Mnium, archegonial branch, l.s
SB.2373 Coprinus, ink caps mushroom, section of pleus
SB.2380 Spirogyra sp. in conjugation
SB.2420 3 types of bacteria, cocci, bacilli, spirelli

histology, zoology and botany set

PB. 5214 FOR EDUCATION

Set with 25 microscopy slides for education: histological samples of mammals, zoology and botany.
All microscope slides are supplied in a plastic box for 25 slides. The set contains:

HISTOLOGY OF MAMMALS

SH.1060 Tendon l.s (Dense connective tissue), dog
SH.1075 Skin section with sweat gland, human
SH.1330 Testis rabbit, c.s
SH.1340 Ovary rabbit with developed eggs
SH.1360 Sperm, human, smear
SH.1490 Retina, rabbit, sec

ZOOLOGY

SZ.1522 Paramecium conjugation w.m
SZ.1524 Paramecium in fission, w.m
SZ.1540 Trachelomonas, a free swimming type euglena
SZ.1585 Hydra with endoderm + ectoderm, c.s
SZ.1710 Apis mellifica - honey bee compound eye, w.m
SZ.1720 Culex pipiens - house mosquito, larva w.m
SZ.1724 Giant chromosomes of salivary gland, w.m
SZ.1810 Mya arenaria, clam gill, c.s
SZ.1860 Lancelet, Section through gonads and gills, c.s

BOTANY

SB.2015 Ranunculus, buttercup, root c.s
SB.2076 Tilia, lime tree, 1, 2 & 3 year stem, c.s on one slide
SB.2080 Pinus - pine tree, stem l.s
SB.2140 Triticum, wheat, leaf, c.s
SB.2150 Monocot/dicot leaves,zea mays/ ligustrum lucidum, c.s
SB.2230 Pinus, pine tree, male (cone) globose fruit l.s
SB.2232 Pinus, pine tree, female (cone) globose fruit l.s
SB.2315 Fern, prothallium w. young sporophyte w.m
SB.2320 Cyrtomium, fern, leaf with sporangia
SB.2384 Volvox sp. w.m

histology, zoology and botany set

PB. 5215 FOR EDUCATION

Set with 25 microscopy slides for education: histological samples of mammals, zoology and botany.
All microscope slides are supplied in a plastic box for 25 slides. The set contains:

HISTOLOGY

SH.1043 Cardiac muscle, dog, l.s
SH.1070 Squamous epithelium, human, isolated cells from mouth, smear
SH.1315 Kidney rat, sec. cortex & medulla
SH.1420 Cerebellum section, dog
SH.1450 Spinal cord, rabbit, c.s
SH.1470 Taste buds, rabbit, l.s

ZOOLOGY

SZ.1610 Planaria, flat worm, injected intestinal tube, w.m
SZ.1636 Ascaris megalocephala, horse roundworm, mitosis eggs
SZ.1760 Ctenocephalus canis, dog flea, w.m
SZ.1770 Tetranychus, red spider mite, w.m
SZ.1930 Bird, wing and down feather, section
SZ.1940 Chicken, embryo 48 hours, sagittal section

BOTANY

SB.2090 Hydrilla verticillata, hydrilla stem tip, l.s
SB.2112 Cucurbita, pumpkin, stem, c.s
SB.2135 Nerium oleander, leaf with sunken stomata, c.s
SB.2210 Lilium, lily, anther with mature pollen, c.s
SB.2214 Lilium, lily, pollen, different stages of meiosis
SB.2220 Capsella, shepherds' purse, ovary w. embryo in pre-cotyledon stadium, l.s
SB.2222 Capsella, shepherds' purse, ovary w. embryo in cotyledon stadium, l.s
SB.2234 Pinus, pine tree, pollen, w.m
SB.2330 Marchantia, liverworts, thallus with gemma cup, c.s
SB.2360 Saccaromyces sp., yeast, budding, w.m
SB.2365 Penicillium sp., w.m
SB.2410 Streptococus lactis, milk bacteria, smear
SB.2415 Bacillus subtilis, hay bacteria, smear

USED ABBREVIATIONS	
c.s	cross section
l.s	longitudinal section
w.m	whole mount

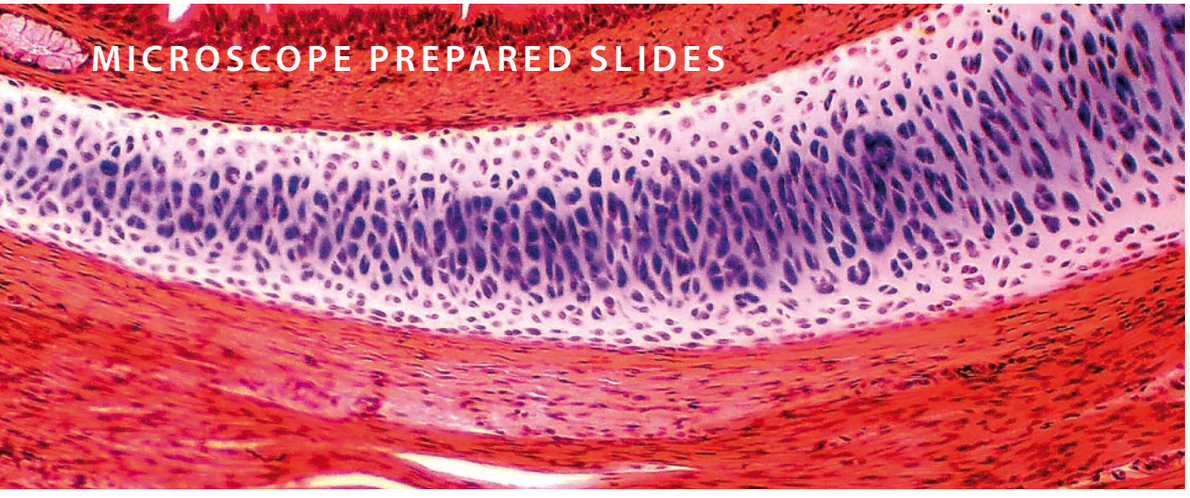

sets with 23 slides for education

mammal histology set

PB.5221 SET FOR EDUCATION

Set with 23 microscopy slides for education: histological samples of mammals.
All microscope slides are supplied in a plastic box for 25 slides. The set contains:

EPHITELIUM AND CONNECTIVE TISSUES

SH.1001 Loose connective tissue, rabbit
SH.1005 Hyaline cartilage, rabbit, section
SH.1011 Hard bone grinding, human, section
SH.1049 Muscle types, striated, smooth, heart muscle, dog, l.s
SH.1060 Tendon, dog, l.s
SH.1070 Squamous epithelium, human, isolated cells from mouth, smear
SH.1072 Skin section through hair follicle, human
SH.1078 Stratified flat epithelium, dog, section

RESPIRATORY, BLOOD CIRCULATION AND ENDOCRINE SYSTEM

SH.1120 Trachea rabbit, c.s
SH.1130 Artery and vein, rabbit, c.s
SH.1150 Blood smear, human, Giemsa stained

DIGESTIVE SYSTEM

SH.1210 Stomach wall, dog, section
SH.1230 Small intestine, dog, c.s
SH.1250 Liver, pig, section

URINARY AND GENITAL SYSTEM

SH.1310 Injected kidney, rabbit, sec
SH.1330 Testis, rabbit, c.s
SH.1340 Ovary with developed eggs, rabbit
SH.1376 Human chromosomes in blood, female

NERVOUS SYSTEM AND SENSORY ORGANS

SH.1410 Nerve, rabbit, c.s and l.s
SH.1430 Cerebrum section, dog
SH.1450 Spinal cord, rabbit, c.s
SH.1470 Taste buds, rabbit, l.s
SH.1490 Retina, rabbit, sec

mammal histology set

PB.5222 SET FOR EDUCATION

Set with 23 microscopy slides for education: histological samples of mammals.
All microscope slides are supplied in a plastic box for 25 slides. The set contains:

EPHITELIUM AND CONNECTIVE TISSUES

SH.1006 Elastic cartilage, rabbit
SH.1012 Hard bone grinding of rabbit, tooth, de-calcium
SH.1040 Smooth muscle, teased preparation, rabbit, l.s+c.s
SH.1043 Cardiac muscle, dog, l.s
SH.1045 Skeletal muscle, dog, l.s and c.s
SH.1075 Skin section with sweat gland, human
SH.1080 Ciliated epithelium, trachea, rabbit

RESPIRATORY, BLOOD CIRCULATION AND ENDOCRINE SYSTEM

SH.1110 Lung with injected blood vessels, rabbit, c.s
SH.1140 Pancreas, rabbit, section
SH.1160 Lymph node, rabbit, section
SH.1170 Thyroid gland, rabbit, section
SH.1180 Adrenal gland, rabbit, section

DIGESTIVE SYSTEM

SH.1220 Oesophagus dog, c.s
SH.1235 Large intestine, dog, c.s
SH.1260 Gall bladder, dog, section
SH.1280 Golgi apparatus in Basal spinal ganglion, dog

URINARY AND GENITAL SYSTEM

SH.1315 Kidney, rat, sec. cortex & medulla
SH.1360 Sperm, human, smear
SH.1375 Human chromosomes in blood, male
SZ.1724 Fruit fly, drosophila, giant chromosomes of salivary gland, w.m

NERVOUS SYSTEM AN SENSORY ORGANS

SH.1415 Motor nerve cells with end plates, rabbit, w.m
SH.1420 Cerebellum section, dog
SH.1480 Eyeball section, rabbit, sagittal section

11 ACCESSOIRES FOR MICROSCOPY

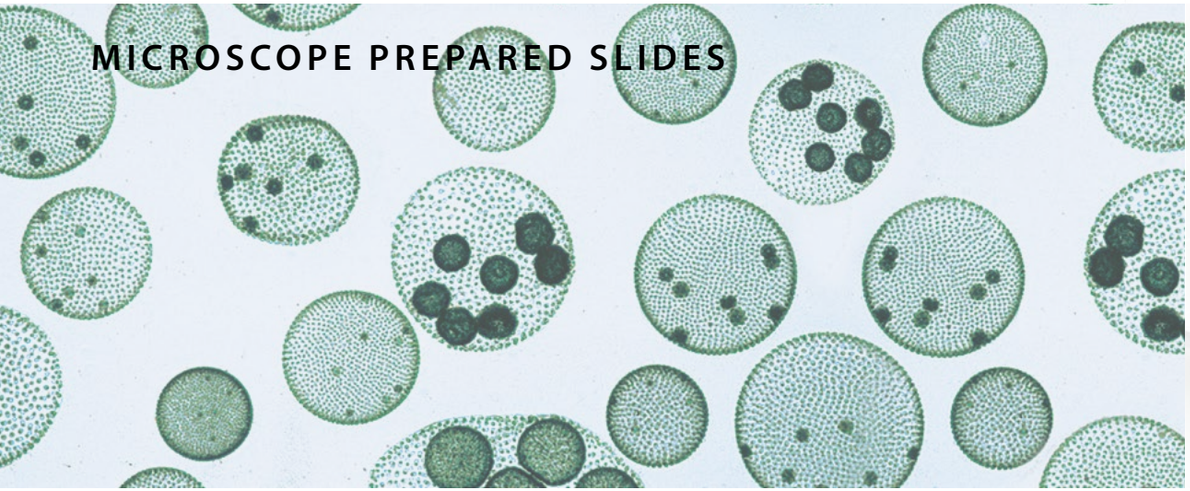

set for hobby 10 slides

zoology and botany set

PB.5204 SET FOR HOBBY

Set with 10 prepared microscopy slides for hobby: zoology and botany.
All microscope slides are supplied in a plastic box with transparent cover for 25 slides. The set contains:

ZOOLOGY

SH.1040 Smooth muscle, teased preparation, rabbit, l.sand c.s
SH.1110 Lung with injected blood vessels, rabbit, c.s
SZ.1708 Apis mellifica, honey bee, mouth parts
SZ.1733 Pieres brassicae, cabbage-white butterfly, part of wing
SZ.1877 Rana sp, frog, blood smear
SB.2015 Ranunculus, buttercup, root, c.s

BOTANY

SB.2160 Lilium, lily leaf, c.s
SB.2222 Capsella, shepherds' purse, ovary w. embryo in cotyledon stadium, l.s
SB.2374 Aspergillus, brown mold, w.m
SB.2384 Volvox sp., w.m

USED ABBREVIATIONS	
c.s	cross section
l.s	longitudinal section
w.m	whole mount

set for hobby 25 slides

slides of histology, zoology and botany

PB.5218 SET FOR HOBBY

Set with 25 prepared microscopy slides for hobby: zoology and botany.
All microscope slides are supplied in a plastic box with transparent cover for 25 slides. The set contains:

HISTOLOGY OF HUMAN AND MAMMALS

SH.1072 Skin section through hair follicle, human
SH.1150 Blood smear human, Giemsa stained
SH.1415 Motor nerve cells with end plates, rabbit w.m
SH.1470 Taste buds, rabbit, l.s

BOTANY

SB.2009 Allium cepa, onion, mitosis root tip, l.s
SB.2055 Zea mays, corn, stem, cs
SB.2075 Tilia, lime tree, one year stem, c.s
SB.2100 Pelargonium hortorum, geranium, stem c.s
SB.2112 Cucurbita, pumpkin, stem, c.s
SB.2130 Helianthus, sunflower, leaf, c.s
SB.2135 Nerium oleander, leaf with sunken stomata, c.s
SB.2210 Lilium, lily, anther with mature pollen, c.s
SB.2225 Zea mays, corn, corn seed with embryo, l.s

ZOOLOGY

SZ.1520 Paramecium, w.m
SZ.1535 Euglena virides, a flagellate with eyespot
SZ.1580 Hydra with bud, w.m
SZ.1630 Taenia, tapeworm cattle, mature proglottid, w.m
SZ.1635 Ascaris megalocephala, horse roundworm, female and male, c.s
SZ.1640 Lumbricus, earthworm, c.s
SZ.1655 Daphnia sp., water flea, w.m
SZ.1705 Apis mellifica, honey bee, posterior leg, w.m
SZ.1710 Apis mellifica, honey bee compound eye, c.s
SZ.1719 Musca domestica, house fly, wing w.m
SZ.1722 Culex pipiens, house mosquito, female, mouth parts
SZ.1724 Fruit fly, drosophila, giant chromosomes of salivary gland, w.m

MICROSCOPE PREPARED SLIDES

individual euroslides

prepared slides

Euromex supplies complete sets and individual prepared microscope slides for educational use as well as for the hobby market

These high quality microscope slides are usually supplied directly from stock, at the very best prices. The slides on the next page are separately available

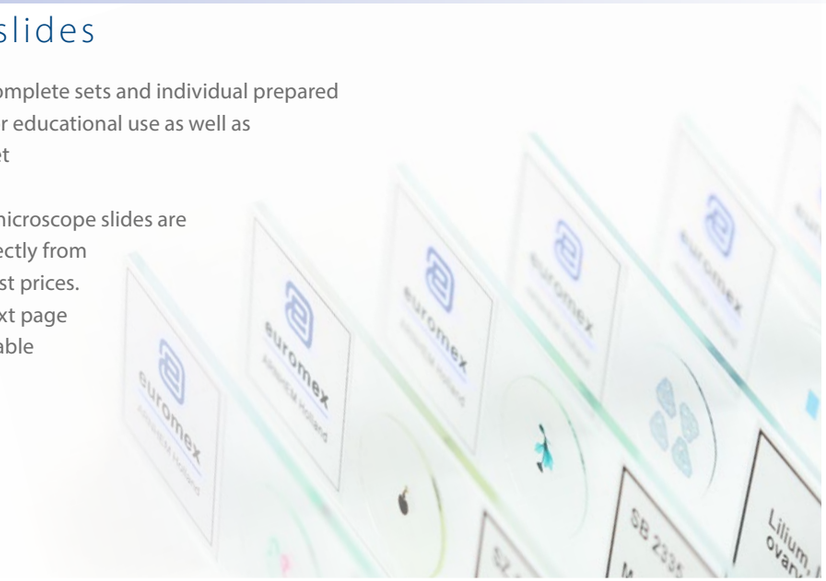

HOW TO ORDER INDIVIDUAL EUROSLIDES

Minimum purchase quantity is 10 pieces of the same slide
The individual slides always have to be ordered together with a storage box (e.g. PB.5181 for 25 slides)

individual euroslides for histology

These histological microscope slides consist of sample of ephitelium and connective tissues, the respiratory system, blood circulation, endocrine system, digestive system, urinary and genital systems, nervous system and sensory organs

EPHITELIUM AND CONNECTIVE TISSUES

SH.1001 Loose connective tissue, rabbit
SH.1005 Hyaline cartilage rabbit, section
SH.1006 Elastic cartilage, rabbit
SH.1011 Hard bone grinding, human, section
SH.1012 Hard bone grinding of rabbit, tooth, decalcium
SH.1040 Smooth muscle, teased preparation, rabbit, l.s and c.s
SH.1045 Skeletal muscle, dog, l.s and c.s
SH.1049 Muscle types, striated, smooth, heart muscle, dog, l.s
SH.1060 Tendon, dog, l.s
SH.1072 Skin section through hair follicle, human
SH.1078 Stratified flat epithelium, dog, section
SH.1080 Ciliated epithelium, trachea, rabbit

RESPIRATORY, BLOOD CIRCULATION AND ENDOCRINE SYSTEM

SH.1110 Lung with injected blood vessels, rabbit, c.s
SH.1120 Trachea, rabbit, c.s
SH.1130 Artery and vein, rabbit, c.s
SH.1140 Pancreas, rabbit, section
SH.1150 Blood smear, human, Giemsa stained
SH.1160 Lymph node, rabbit, section

DIGESTIVE SYSTEM

SH.1220 Oesophagus, dog, c.s
SH.1230 Small intestine, dog, c.s
SH.1250 Liver, pig, section

URINARY AND GENITAL SYSTEM

SH.1310 Injected kidney, rabbit, section
SH.1330 Testis, rabbit, c.s
SH.1340 Ovary with developed eggs, rabbit
SH.1360 Sperm, human, smear

NERVOUS SYSTEM AND SENSORY ORGANS

SH.1410 Nerve, rabbit, c.s and l.s
SH.1415 Motor nerve cells with end plates, rabbit, w.m
SH.1420 Cerebellum section, dog
SH.1450 Spinal cord, rabbit, c.s
SH.1470 Taste buds, rabbit, l.s
SH.1490 Retina, rabbit, section

USED ABBREVIATIONS	
c.s	cross section
l.s	longitudinal section
w.m	whole mount

11 ACCESSOIRES FOR MICROSCOPY

individual euroslides for zoology

This series of zoology microscopy slides consists of samples with single-cell organisms (protozoa), coelenterate, worms (helminthes), Crustaceans (crustaceae), insects and amphibians

PROTOZOA

SZ.1510 Amoeba proteus, w.m
SZ.1520 Paramecium, w.m
SZ.1522 Paramecium in conjugation w.m

SZ.1535 Euglena virides, a flagellate with eyespot
SZ.1540 Trachelomonas, a free swimming type euglena

COELENTERATA

SZ.1580 Hydra with bud, w.m

HELMINTHES

SZ.1630 Taenia, tapeworm pig, mature proglottid, w.m
SZ.1635 Ascaris megalocephala, horse roundworm, female + male c.s
SZ.1636 Ascaris megalocephala, horse roundworm, mitosis eggs
SZ.1640 Lumbricus, earthworm, c.s

CRUSTACEANS

SZ.1655 Daphnia sp., water flea, w.m

INSECTS

SZ.1705 Apis mellifica, honey bee, posterior leg, w.m
SZ.1708 Apis mellifica, honey bee, mouth parts
SZ.1710 Apis mellifica, honey bee compound eye, c.s
SZ.1719 Musca domestica, house fly, wing, w.m
SZ.1720 Culex pipiens, house mosquito, larva, w.m
SZ.1722 Culex pipiens, house modquito, female, mouth parts
SZ.1724 Drosophila, fruit fly, giant chromosomes of salivary gland, w.m
SZ.1730 Pieres brassicae, cabbage-white butterfly, mouth, w.m
SZ.1733 Pieres brassicae, cabbage-white butterfly, part of wing
SZ.1738 Locusta, grasshopper, mouth parts, w.m
SZ.1760 Ctenocephalus canis, dog flea, w.m
SZ.1780 Insects- four types of legs, honey bee, house fly, house modquito, spider

AMPHIBIANS

SZ.1877 Rana sp, frog, blood smear
SZ.1880 Frog uncleaved egg, c.s
SZ.1881 Frog egg, two cells stadium, c.s
SZ.1883 Frog egg, advanced cleavage c.s
SZ.1885 Frog egg, blastula phase, c.s
SZ.1887 Frog egg, early gastrula phase, c.s
SZ.1889 Frog egg, advanced gastrula phase, c.s

HOW TO ORDER INDIVIDUAL EUROSLIDES

Minimum purchase quantity is 10 pieces of the same slide
The individual slides always have to be ordered together with a storage box (e.g. PB.5181 for 25 slides)

individual euroslides for botany

This series of botanic microscopy slides consists of samples of sections of roots, stems, leaves, flowers, fruits and seeds, ferns and mosses, fungi, algae and bacteria

ROOTS

SB.2006 Allium cepa, onion, scale epidermis, w.m
SB.2009 Allium cepa, onion, mitosis root tip, l.s
SB.2015 Ranunculus, buttercup, root, c.s

SB.2020 Helianthus, sunflower, old root, c.s
SB.2025 Monocot/dicot plant roots, zea mays/helantius, c.s
SB.2040 Solanum tuberosum, potato, starch grains

STEMS

SB.2055 Zea mays, corn, stem, c.s
SB.2060 Triticum aestivum, wheat, stem, c.s
SB.2070 Helianthus, sunflower, young stem, c.s
SB.2076 Tilia, lime tree, 1, 2 and 3 year stems on one slide, c.s
SB.2095 Monocot/dicot stem, corn/pumpkin, c.s
SB.2100 Pelargonium hortorum, geranium, stem, c.s
SB.2105 Hibiscus, young stem, c.s
SB.2115 Sambucus, elderberry or Morus Alba, mulberry, stem with crok cambium and lenticels, c.s

LEAVES

SB.2130 Helianthus, sunflower, leaf, c.s
SB.2135 Nerium oleander, leaf with sunken stomata, c.s
SB.2140 Triticum, wheat, leaf, c.s
SB.2150 Monocot/dicot leaves, zea mays/ligustrum lucidum, c.s
SB.2160 Lilium, lily leaf, c.s

FLOWERS, FRUITS AND SEEDS

SB.2205 Monocot/dicot flower, zea mays/ranunculus, c.s
SB.2210 Lilium, lily, anther with mature pollen, c.s
SB.2212 Lilium, lily, overy, c.s
SB.2214 Lilium, lily, pollen, different stages of meiosis
SB.2220 Capsella, shepherds' purse, ovary w. embryo in pre-cotyledon stadium, l.s
SB.2222 Capsella, sheperd's purse, ovary w. embryo in cotyledon statium, l.s
SB.2225 Zea mays, corn seed with embryo, l.s
SB.2232 Pinus, pine tree, female (cone) globose fruit, l.s
SB.2240 Triticum aestivum, wheat, kernel, l.s

FERNS AND MOSSES

SB.2315 Cyrtomium, holly fern, prothallium with young sporophyt, w.m
SB.2337 Mnium, antheridial branch, l.s
SB.2339 Mnium, archegonial branch, l.s

FUNGI

SB.2360 Saccaromyces sp., yeast, budding, w.m
SB.2365 Penicillium sp., w.m
SB.2373 Coprinus, ink caps mushroom, section of pileus
SB.2374 Aspergillus, brown mold, w.m

ALGAE

SB.2377 Diatoms, w.m
SB.2380 Spirogyra sp. in conjugation
SB.2384 Volvox sp., w.m

BACTERIA

SB.2420 3 types of bacteria, cocci, bacilli, spirelli

DISPOSABLES

product information

disposables

MICROSCOPE SLIDES AND COVER GLASSES

PB.5150 Microscope slides 76 x 26 mm, half white glass, cut edges. 50 pieces

PB.5155 Microscope slides 76 x 26 mm white glass, ground edges. 50 pieces

PB.5157-W Microscope slides 76 x 26 mm, ground white frosted side, 50 pieces

PB.5157-B Microscope slides 76 x 26 mm, ground blue frosted side, 50 pieces

PB.5160 Microscope slides 76 x 26 mm with concavity, ground edges. 10 pieces

PB.5165 Cover glasses 18 x 18 mm, thickness 0.13-0.17 mm. 100 pieces

PB.5168 Cover glasses 22 x 22 mm, thickness 0.13-0.17 mm. 100 pieces

PB.5170 Cover glasses Ø18 mm, thickness 0.13-0.17 mm. 100 pieces

MICROSCOPE SLIDE BOXES

PB.5181 Black plastic slide box for 25

PB.5180 Wooden slide box for 25 slides. White interior with index

PB.5185 Black plastic slide box for 100 slides

PB.5150

PB.5180

PB.5168 / PB.5170

STAINS

Staining enables observation of cells and tissues of low contrast. Euromex offers a range of common stains

product information

MISCELLANEOUS ACCESSORIES

PB.5200 Staining trough for 10 slides

PB.5210 Fine pointed brush

PB.5245 Lens paper. 100 sheets

PB.5250 Solid paraffin. Melting point 60°C, 200 grams

PB.5255 Immersion oil, refractive index nD = 1.515. (25 ml)

PB.5265 Entellan, quick drying Canada balsam. In bottle (25 ml)

PB.5274 Isopropyl alcohol 99%. In bottle (200 ml)

PB.5277 Formalin 40%, fixing agent. In bottle (200 ml)

PB.5275 Cleaning kit: lens cleaning fluid, lint free lens tissue, brush, air blower, cotton swabs

PB.5276 Microscope maintenance and servicing kit, 16pcs: cleaning brush, 6 pcs screwdriver set, air blower, 3 pcs Allen key, 1.5, 2, 2.5 mm, lens cleaning fluid 20 ml, cleaning cloth 140 x 140 mm, 100 pcs lens tissue sheets, tube of maintenance grease, 10 ml bottle of oil, packed in a nice toolbox

(DISSOLVED) STAINS

Supplied in 25 ml bottles

PB.5283 Eosin yellow. Stain for general overall-view coloring

PB.5286 Haematoxylin according to Ehrlich. General purpose nuclear stain

PB.5289 Astra Blue. Stain for vegetal cells. To be used in combination with safranin

PB.5292 Orange-G, stain for most elementary structures of animal tissues

PB.5295 Safranine. A general stain for showing nuclei and cellulose walls. To be used in combination with Astra Blue

PB.5297 Methylene Blue. Biological and bacteriological stain

PB.5300 Analin Blue, to be used as third color for Azo pigmentation

PB.5305 Fuchsine. For staining bacilli in tissue

PB.5276

PB.5286 - PB.5297

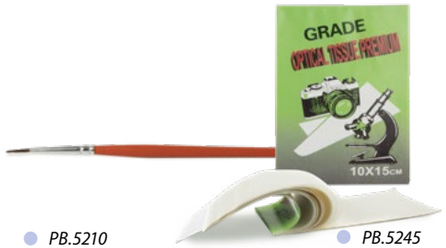

PB.5210

PB.5245

other products

optical instruments

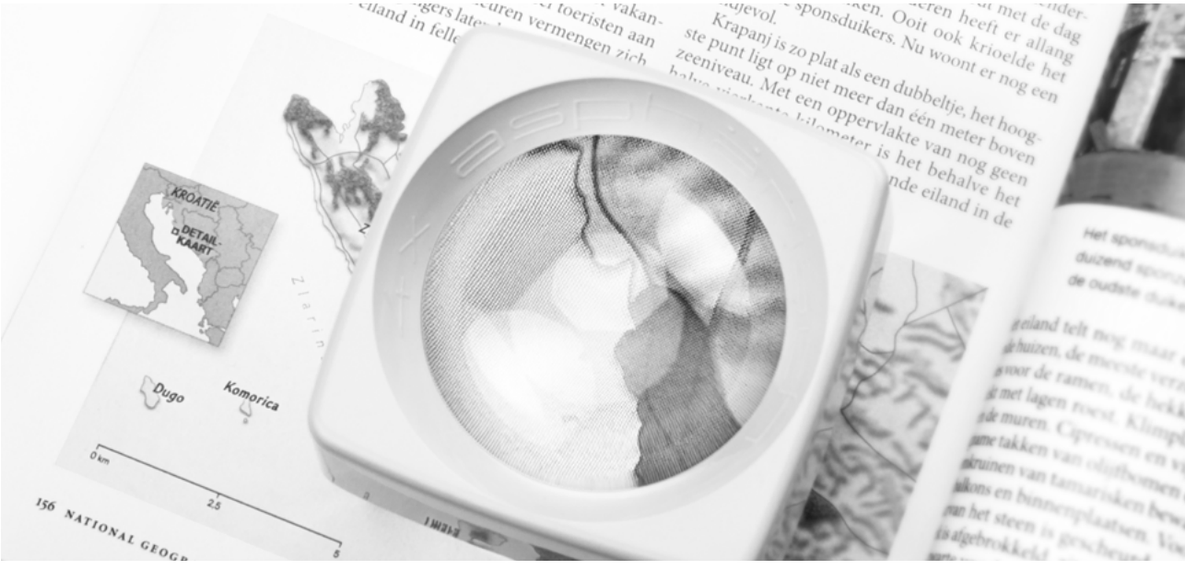

optical instruments

product information

Euromex offers a large range of optical products for
a wide variety of applications in different fields

Our high-quality magnifiers, refractometers and other optical instruments
all ensure an excellent optical quality and unmatched durability

MAGNIFIERS &
MEASURING MICROSCOPES • PAGE 398
REFRACTOMETERS • PAGE 402
POLARIMETERS • PAGE 408
SPECTROMETERS • PAGE 410

12 OTHER OPTICAL PRODUCTS
MAGNIFIERS | INSTRUMENTS

MAGNIFIERS & MEASURING MICROSCOPES

Magnifiers are widely used by biologists, jewelers, watchmakers and philatelists to accurately observe all details of the object

product information

handheld magnifiers

and magnifiers with handles

PB.5020 Magnifier with handle 4x, lens Ø 50 mm and handle Ø 8 mm. Fits on PB.5022

PB.5021 Magnifier with handle 10x, aplanatic lens Ø 25 mm and handle Ø 8 mm. Fits on PB.5022

PB.5022 Heavy stand with adjustable cross clamp, base Ø 70 mm. Weight 450 grams. For PB.5022 and PB.5021

PB.5021

PB.5020

PB.5022

FOLDING MAGNIFIERS

PB.5016 Aplanatic magnifier 6x, doublet. Lens Ø 20 mm. Field of view 25 mm

PB.5018 Aplanatic magnifier 15x, doublet. Lens Ø 18 mm. Field of view 14 mm

PB.5032 Achromatic magnifier 10x, triplet. Lens Ø 20 mm. Field of view 15 mm

PB.5033 Achromatic magnifier 20x, triplet. Lens Ø 20 mm. Field of view 8 mm

PB.5036 Aplanatic magnifier 10x, doublet. Lens Ø 20 mm. Field of view 20 mm

PB.5037 Achromatic diamond magnifier 10x with four lenses Ø 21 mm. Field of view 25 mm

PB.5032

PB.5016

FOLDING MAGNIFIERS WHITE LED ILLUMINATION

PB.5034-LED Achromatic magnifier 10x triplet. Lens Ø 21 mm. White LED illumination

PB.5018-LED Achromatic magnifier 15x triplet. Lens Ø 21mm. White LED illumination

PB.5033-LED Achromatic magnifier 20x, triplet. Lens Ø 21 mm. White LED illumination

PB.5035-LED Achromatic magnifier 30x triplet. Lens Ø 21 mm. White LED illumination

FOLDING MAGNIFIERS WHITE LED AND UV ILLUMINATION

PB.5034-LUV Achromatic magnifier 10x triplet. Lens Ø 21 mm. White LED and UV illumination

PB.5018-LUV Achromatic magnifier 15x triplet. Lens Ø 21mm. White LED and UV illumination

PB.5033-LUV Achromatic magnifier 20x, triplet. Lens Ø 21 mm. White LED and UV illumination

PB.5035-LUV Achromatic magnifier 30x triplet. Lens Ø 21 mm. White LED and UV illumination

PB.5034-LED

PB.5034-LUV

MAGNIFIERS & MEASURING MICROSCOPES

Measuring microscopes are built with a microscope objective for magnifications from 20 to 100x times

magnifiers & measuring microscopes

TABLE MAGNIFIERS

PB.5039 Table magnifier, 15x magnification.
Glass achromatic lens Ø 19 mm, field of view 15 mm

PB.5041 Table magnifier, 10x magnification.
Glass lens Ø 26 mm, field of view 25 mm

PB.5043 Table magnifier, 4x magnification.
Plastic lens Ø 57 mm, field of view 55 mm

PB.5040 Table magnifier, 8x magnification.
Plastic lens Ø 23 mm, field of view 30 mm.
10mm/100 reticle

MISCELLANEOUS MAGNIFIERS

PB.5030 Dual sliding magnifier with 3x and 6x magnification.
Lens aperture 23 x 23 mm. Fields of view
50 x 50 mm and 25 x 25 mm. Plastic housing

PB.5049 Linen tester folding magnifier with 6x aplanatic lens.
A 25 x 25 mm base with millimeter scale. Metal
casing lacquered in black. Supplied with plastic case

PB.5039 / PB.xxxx

PB.5043 / PB.5040

PB.5030

PB.5049

MEASURING MAGNIFIERS WITH RETICLE

PB.5044 Measuring magnifier 7x.
Eyepiece Ø 18 mm. Field of view 24 mm.
Measuring scale 10-0-10 mm divided into
0.1 mm and crosshairs

PB.5045 Measuring magnifier 7x.
Eyepiece Ø 18 mm. Field of view 24 mm.
With 5 interchangeable scales for angle, thickness
and linear measurements

PB.5046 Measuring magnifier 10x.
Eyepiece Ø 20 mm. Field of view 35 mm.
Measuring scale 15-0-15 mm with 0.1, 0.2 and
0.5 mm graduations

PB.5048 Measuring magnifier 4x.
Eyepiece Ø 30 mm. Field of view 65 mm.
Measuring scale 25-0-25 mm with 0.1, 0.2 and
0.5 mm graduations

PB.5047 Measuring magnifier 10x.
Eyepiece Ø 25 mm. Field of view 30 mm.
Measuring scale 15-0-15 mm with 0.1, 0.2 and
0.5 mm graduations. White LED-illumination

MEASURING MICROSCOPES

PB.5008 Measuring microscope 20x with LED illumination.
Measuring scale 7.2 mm with 0.1 mm graduation

PB.5010 Measuring microscope 40x with LED illumination.
Measuring scale 3 mm with 0.05 mm graduation

PB.5012 Measuring microscope 60x with LED illumination.
Measuring scale 1.75 mm with 0.02 mm graduation

PB.5014 Measuring microscope 100x with LED illumination.
Measuring scale 1.1 mm with 0.01 mm graduation

PB.5008

PB.5046

PB.5047

PB.5044

PB.5048

PB.5045

refractometers

refractometers

Refractometers are used for the identification of substances and concentration measurements of fluids. Because the refractive index (R.I.) of a solution is proportional to the concentration, it is easy to identify the substance or to measure the purity and concentrations of solutions

The Euromex refractometers are calibrated at 20° Celsius. Most refractometers are equipped with Automatic Temperature Compensation (ATC)

refractometers

REFRACTOMETERS • PAGE 400
ABBE REFRACTOMETER • PAGE 403

12 OTHER OPTICAL PRODUCTS MAGNIFIERS | INSTRUMENTS

Analog refractometer

Digital refractometer

refractometers

handheld and table models

A refractometer is an instrument that measures the refractive index of a liquid or refractive material such as sugar concentrations in fruits, juices, soft drinks, energy drinks, wines or must, liquors, jams, honey, industrial lubricants, antifreeze, ethanol, battery acids, salt, propylene glycol, ethylene glycol solutions

A few drops of the liquid that needs to be examined are gently deposited on a measuring prism and covered with a cover-glass. The rays of the light source (ambient light, built-in LED light source or external cold-light source) will be bent (refracted) in function of the composition of the liquid under observation

This results in a shadow line between a dark and a light portion. The measured value can be directly read through a focusable eyepiece on a refraction index scale and/or on a specific built-in scale(s) of the refractometer in Brix, Oechsle, Babo units or % volume, specific gravity, protein in serum or in °C

Euromex offers portable or handheld refractometers, analogue or digital and laboratory Abbe refractometer products used in wine making, distilling, food processing, canning, beekeeping, brewing, pharmaceutical, manufacturing, machining, automotive industries

Most of the refractometers have also an A(utomated) T(emperature) C(ompensation) mechanism in order to compensate for temperature variations. Calibration can be verified with a calibration fluid (in most cases distilled water) and adjusted by a screw if needed

Application	Art no	Range	Accuracy	Remarks	ATC	Handheld model	Table model	Analog	Digital
Concentrations of sugar in marmalades, fruits, syrups, wine and monitoring of oil emulsions	RF.6190	0-90 Brix	0.2	3 scales: 0-42 / 42-71 / 71-90 Brix		•		•	
	RF.6510	0 - 10 Brix	0.1		•	•		•	
	RF.6520	0 - 20 Brix	0.1		•	•		•	
	RF.6532	0 - 32 Brix	0.2		•	•		•	
	RF.6562	28 - 62 Brix	0.2		•	•		•	
	RF.6580	0 - 80 Brix	0.5		•	•		•	
	RF.6582	45 - 82 Brix	0.5		•	•		•	
	RF.6592	58 - 92 Brix	0.2		•	•		•	
	RF.6635	0 - 150 °Oe 0 - 35 Brix 0 - 27 °KMW 0 - 22 % 0 - 37 CNM	1 0.2 0.2 0.2 0.5	Oechsle units Sugar concentration Babo units % volume	•	•		•	
	RD.6735	0 - 150 °Oe 0 - 35 Brix 0 - 25 °KMW 0 - 22 %	1 0.1 0.1 0.1		•	•			•
	RD.6645	0 - 45 Brix 1.33 - 1.41 R.I.	0.1 0.0003		•	•			•
	RD.6666	0 - 80 Brix 1.33 - 1.51 R.I.	0.5 0.0005		•	•			•
	RD.6667	58 - 92 Brix 1.43 - 1.52 R.I.	0.2 0.0003		•	•			•
Honey	RF.6642	13 - 25 %	0.1	Honey moisture	•	•		•	
	RF.6644	58 - 92 Brix 38 - 43 °Be 12 - 27 %	0.5 0.5 1	 Water	•	•		•	
Concentration of sugar/alcohol %	RF.6627	0 - 25 % 0 - 40 Brix 0 - 20 Baume	0.2 0.2 0.2	% volume	•	•		•	
Salinity and concentration of sugar	RF.6610	0 - 100 ‰ 0 - 10 Brix 1.00 - 1.07 R.I.	1 0.1 0.005		•	•		•	
	RF.6628	0 - 28 %	0.2		•	•		•	
	RD.6728	0 - 28 % 0 - 45 Brix 1.33 - 1.41 R.I.	0.1 0.1 0.0003	% NaCl Only for sugar/salt	•	•			•
Clinical applications Proteins	RF.6612	0 - 12 g/dl 1.00 - 1.05 sg 1.333 - 1.360 R.I	0.2 0.002 0.0003	Proteins in serum Urine specific gravity	•	•		•	

Application	Art no	Range		Accuracy	Remarks	ATC	Handheld model	Table model	Analog	Digital
	RD.6712	0 - 12	g/dl	0.1	Proteins in serum	•	•			•
		1.00 - 1.05	sg	0.001	Urine specific gravity					
		1.33 - 1.39	R.I.	0.0001						
	RD.6714	0 - 14	g/dl	0.1	Proteins in serum (dog)	•	•			•
		0 - 14	g/dl	0.1	Proteins in serum (cat)					
		1.00 - 1.06	sg	0.001	Urine specific gravity (dog)					
		1.00 - 1.06	sg	0.001	Urine specific gravity (cat)					
		1.33 - 1.39	R.I.	0.0001						
Battery Acid/Coolant	RF.6650	1.10 - 1.40	sg	0.01	Battery fluids	•	•		•	
		-50 / 0	°C	5	Ethylene glycol G13					
		-50 / 0	°C	5	Propylene glycol G11/12					
		-40 / 0	°C	10	windshield washer fluid					
	RD.6730	1.0 - 1.50	sg	0.01	Battery fluids	•	•			•
		-50 / 0	°C	0.5	Ethylene glycol G13					
		-50 / 0	°C	0.5	Propylene glycol G11/12					
		-40 / 0	°C	0.5	windshield washer fluid					
AdBlue/Urea	RF.6652	0 - 40	%	0.2		•	•		•	
Identification of precious stones	RF.6381	1.30 - 1.81	R.I.	0.01				•	•	

ACCESSORIES AND SPARE PARTS

RF.5295 Test slide 78.8 Brix for calibration of RF.5190

RF.5385 5 ml immersion nD 1.65 liquid for RF.5381 and RF.6381

LE.5209 20 W 12 V cold light source with single fiber light conductor (for Abbe refractometer 98.490)

98.492 Thermometer 0-50° C (for Abbe refractometer 98.490)

98.496 Calibration slide nD 1.5163 (for Abbe refractometer 98.490)

Digital refractometer

98.490

Abbe laboratory refractometer substance identification

The Abbe laboratory refractometer is a bench-top instrument for high-precision measurements of an index of refraction and suitable for determination of the refractive index of solid samples, such as glass, plastics, and polymer films

The instrument is supplied with a thermometer and water connection to control fluid temperatures. Also equipped with a Brix and a refraction index scale and supplied with a test plate

Capable of measuring all kinds of concentrations and identifying several types of substances

The Abbe refractometer can be connected to a water bath for measuring at a controlled temperature. During the use of this type of refractometer the use of a cold light source such as the LE.5209 is recommended.

This Abbe table refractometer has scales for measurement of sugar concentrations and refractive indices. Delivered with carrying case, digital thermometer, calibration plate, adjusting tool and with 0.5 ml calibration liquid

product information

Substance identification of sugar concentration

MODEL	Scales	Accuracy	Remarks	Analog
98.490	0-95 Brix	0.5 Brix	Abbe table refractometer without light source	•
	1.300-1.700 RI	0.0002 RI		

polarimeters & spectroscopes

polarimeters & spectroscopes

A polarimeter measures the rotation angle of polarized light traveling through an optically active substance. The rotation angle of the polarization plane of linear polarized light is different for each optical active substance as described in the Law of Biot

Polarimetry is a non-destructive test method for measuring optical activity of organic and inorganic substances. It is very useful to analyze expensive non-reproducible samples. Polarimeters are extensively used for quality and process control in research laboratories in the chemical and food industry

Spectroscopes are used to visualize the light spectrum of light sources

product information

polarimeter

99.400-LED

Polarimeters are suitable for fast and accurate measurements of sugars, glucose, perfume, chemical substances and medical drugs. Equipped with a Glan Thomson prism and Laurent Quartz plate, a built-in 230 V 589.3 nm sodium lamp or a high-power LED with 589.3 nm filter

HIGHLIGHTS

The polarimeters are delivered with 100 and 200 mm observation tubes

Equipped with a built-in 230 V 589.3 nm sodium lamp or high-power LED with 589.3 nm filter

Fast and accurate

Polar scale, range ± 180° with 0.1° readings. Supplied with observation tubes of 100 mm and 200 mm. Bright light measuring field permits reading with accuracy of 0.1° with aid of Vernier

ACCESSORIES FOR 99.400

99.410	Measuring tube, 100 mm long
99.415	Measuring tube, 200 mm long
99.430	Cover glass for measuring tube Ø 15 mm
99.431	Rubber ring (for 99.430)
99.197	Spare sodium 589.3 nm lamp

MODEL	Scales	Accuracy	Observation tubes 100 and 200 mm	230 V sodium lamp with 589.3 nm filter	230 V High power LED with 589.3 nm filter
99.400	± 180°	± 0.1° polar scale	•	•	
99.400-LED	± 180°	± 0.1° polar scale	•		•

SPECTROSCOPES

Euromex handheld spectroscopes are used for optical experiments in natural sciences, industry and education

product information

handheld spectroscopes

SP.5200

Handheld spectroscope with adjustable slit, comparison prism, mirror, five glass mini-cuvettes and wavelength scale 400 - 700 nm with 589 nm indication. Divisions 10 nm

- **Direct vision type**
- **Adjustable eye lens**
- **Adjustable slit 0 - 1 mm**
- **Angle dispersion C - F 7°**
- **Linear dispersion 60 mm**
- **Comparison prism for comparison between products**
- **Mirror**
- **5 Glass cuvettes**
- **Wavelength scale 400 - 700 nm**

SP.5200

MODEL	Dimensions	Weight (grams)	Adjustable slit	Comparison prism	Angle dispersion	Linear dispersion	Wavelength scale	589 nm indication	With 5 glass cuvettes
SP.5200	h50xl115xp23	250	0-1 mm	•	C-F 7°	60 mm	•	•	•

SP.5155

Handheld spectroscope with adjustable slit and comparison prism, mirror and five glass cuvettes

- **Direct vision type**
- **Adjustable eyelens**
- **Adjustable slit 0 - 1 mm**
- **Angle dispersion C - F 7°**
- **Linear dispersion 60 mm**
- **Comparison prism**
- **Mirror**
- **five Glass cuvettes**

SP.5155

MODEL	Dimensions	Weight (grams)	Adjustable slit	Comparison prism	Angle dispersion	Linear dispersion	Wavelength scale	589 nm indication	With 5 glass cuvettes
SP.5155	h45x l105xd23	125	0-1 mm	•	C-F 7°	60 mm	- -	- -	•

SP.5150

Handheld spectroscope with adjustable slit from 0 tot 1 mm

- **Direct vision type**
- **Adjustable eye lens**
- **Adjustable slit 0 - 1 mm**
- **Angle dispersion C - F 7°**
- **Linear dispersion 60 mm**

SP.5150

MODEL	Dimensions	Weight (grams)	Adjustable slit	Comparison prism	Angle dispersion	Linear dispersion	Wavelength scale	589 nm indication	With 5 glass cuvettes
SP.5150	90 x18 mm Ø	92	0-1 mm	- -	C-F 7°	60 mm	- -	- -	- -

SP.5100

Handheld spectroscope with fixed slit

- **Direct vision type**
- **Adjustable eye lens**
- **Fixed slit**
- **Angle dispersion C - F 6°**
- **Linear dispersion 40 mm**

SP.5100

MODEL	Dimensions	Weight (grams)	Adjustable slit	Comparison prism	Angle dispersion	Linear dispersion	Wavelength scale	589 nm indication	With 5 glass cuvettes
SP.5100	90 x18 mm Ø	72	- -	- -	C-F 6°	40 mm	- -	- -	- -

choose the right

euromex microscope

Euromex offers a large range of microscope series. Selecting the right microscope for your application might be challenging and time consuming.
To simplify this process we have listed our recommended models for most common applications in education, laboratories and industry

microscope selector

EDUCATION	FIELD OF APPLICATION	RECOMMENDED MODELS
• botany	Study of plants as branch of biology. Plant anatomy and morphology. Plant genetics and ecology. Plant biochemistry	MicroBlue, EcoBlue, BioBlue, BioBlue.Lab, AP series, EduBlue, StereoBlue
• digital imaging	Observation and perform analysis on microscope images, storage and share captured and videos	CMEX cameras, CCD cameras, HD cameras, EduPad, MacroZoom
• electronics	Development, production, assembling and inspection of electronic components or circuitry	bScope® (materials), EduBlue, StereoBlue, NexiusZoom, MacroZoom
• entomology	Study of insects as branch of zoology. Identification and classification of beetles, flies, termites, moths and butterflies, bees, ants, wasps	MicroBlue, EcoBlue, BioBlue, BioBlue. Lab, AP series, EduBlue, StereoBlue, MacroZoom
• geology, mineralogy	Earth Science; Study of solids, rocks and processes. Identification and classification of rocks and minerals	EcoBlue (polarization), BioBlue (polarization), AP series, EduBlue, StereoBlue
• geology, petrology	Identification by means of petrographic microscope	EcoBlue (polarization), BioBlue (polarization), AP series, EduBlue, StereoBlue
• mechanics	Manufacturing and quality inspection of mechanical parts	bScope® (materials), EduBlue, StereoBlue, NexiusZoom, MacroZoom
• microbiology	Study of microscopic uni-, multi- or acellular small organisms such as protozoa, algae, bacteria and more. Identification and classification	EcoBlue, BioBlue, bScope®, Delphi-X Observer
• mycology	Study of fungi as branch of biology. Identification and classification	EcoBlue, BioBlue, BioBlue.Lab, bScope®, AP series, EduBlue, StereoBlue
• petrology	Study of the composition and structure of rocks as branch of geology. Identification by means of polarization microscopes	EcoBlue (polarization), BioBlue (polarization), AP series, EduBlue, StereoBlue
• zoology	Animal biology. Study of invertebrates and vertebrates and related branches	EcoBlue, BioBlue, BioBlue.Lab, bScope®, AP series, EduBlue, StereoBlue, MacroZoom

UNIVERSITY LABS	FIELD OF APPLICATION	RECOMMENDED MODELS
• agronomy & forestry	Selective breeding of plants, fruit and production of food from plants, wood from trees, fuel. Plant physiology and genetics research	BioBlue.Lab, bScope®, iScope®, Oxion, StereoBlue, NexiusZoom, DZ series, MacroZoom
• anatomopathology	Diagnosis of diseases of organs or tissues. Cytopathology and forensic pathology	BioBlue.Lab, bScope®, iScope®, Oxion, Delphi-X Observer, NexiusZoom, DZ series
• asbestos control	Research of asbestos fibers, environmental protection during restoration of older buildings	iScope® (asbestos and polarization), NexiusZoom, DZ series, Z series
• bacteriology	Study of bacteria as subdivision of microbiology. Identification, classification	BioBlue.Lab, bScope®, iScope®, Oxion, Delphi-X Observer
• biochemistry	Study of chemical processes within living organism. Identification and classification of enzymes and structure of biomolecules	BioBlue.Lab, bScope®, iScope®, Oxion, Delphi-X Observer
• biomedical	Study of medical microbiology, virology, epidemiology, biomedical engineering	BioBlue.Lab, iScope®, Oxion, Delphi-X Observer
• biotechnology	Study of living organism in order to make food products, for plant protection (genetically modified organism) and other bio-process engineering. Development of pharmaceutical drugs, genetic testing, enzymes production, biofuels, textile	BioBlue.Lab, bScope®, iScope®, Oxion, Delphi-X Observer, StereoBlue, NexiusZoom, DZ series
• botany	Study of plants as branch of biology. Plant anatomy and morphology. Plant genetics and ecology. Plant biochemistry	BioBlue.Lab, bScope®, StereoBlue, NexiusZoom, DZ series, MacroZoom
• cell culture	Controlled growing of cells and tissues, fungal culture and microbiological culture	Delphi-X Inverso, Oxion Inverso, NexiusZoom, DZ series
• chemistry	Study of the composition and properties of chemicals	iScope® (materials and polarization), Oxion (materials), bScope® (materials), NexiusZoom, DZ series
• cosmetics	Research, development and testing (safety) of substances for make-up or perfume	iScope® (materials), Oxion (materials), bScope® (materials), NexiusZoom, DZ series
• cytology	Study of cell structure, function and chemistry. Detection of cellular diseases	BioBlue.Lab, iScope®, Oxion, Delphi-X Observer
• dermatology	Study and diagnosis, treatment of skin, nails and hair diseases	iScope®, Oxion, NexiusZoom, StereoBlue, DZ series, MacroZoom
• digital imaging	Observation and analysis of microscope images, save and share captured images and videos	CMEX cameras, CCD cameras, HD cameras, Cooled cameras, EduPad, ProPad
• electronics	Development, production, assembly and inspection of electronic components or circuitry	iScope® (materials), Oxion (materials), bScope® (materials), StereoBlue, Nexius-Zoom, DZ series, Z series, MacroZoom
• embryo collection	Embryo collection and transfer in mares, pigs, cows. Quality control	NexiusZoom, DZ series, Z series

UNIVERSITY LABS	FIELD OF APPLICATION	RECOMMENDED MODELS
• embryology	Study of gametes, embryos and foetuses	BioBlue.Lab, iScope®, Oxion, StereoBlue, NexiusZoom, DZ series
• entomology	Study of insects as branch of zoology. Identification and classification of beetles, flies, termites, moths and butterflies, bees, ants, wasps	BioBlue.Lab, bScope®, iScope®, Oxion, StereoBlue, NexiusZoom, DZ series, MacroZoom
• environmental	Monitoring of environmental conditions such as water, atmosphere, ecosystems, soil and pollution	BioBlue.Lab, bScope®, iScope®, Oxion, StereoBlue, NexiusZoom, DZ series
• fluorescence	Study of living and non living materials with the help of fluorescence markers (fluorochromes)	iScope® (fluorescence), Oxion (fluorescence), Delphi-X Observer (fluorescence), Oxion Inverso (fluorescence), bScope® (fluorescence), DZ series
• food and beverages	Quality and safety controls, before, during and after the production of food and beverages	BioBlue.Lab, bScope®, iScope®, Oxion
• forensics	Analysis of scientific evidence. Toxicology, fingerprints, Forensic anthropology and archeology, forensic botany and entomology	BioBlue.Lab, iScope®, iScope® (materials and polarization), Oxion, Oxion (materials), Oxion Inverted, Oxion Inverted (materials), NexiusZoom, DZ series, Z series
• genetics	Study of genes, heredity in living organisms including bacteria, plants, animals and humans	iScope®, Oxion, Delphi-X Observer, DZ series
• geology, mineralogy	Earth Science; Study of solids, rocks and processes Identification and classification of rocks and minerals	iScope® (materials), Oxion (materials), bScope® (materials), StereoBlue, NexiusZoom, DZ series, MacroZoom
• geology, petrology	Identification by means of petrographic microscopy	iScope® (polarization), Delphi-X Observer (polarization), StereoBlue, NexiusZoom, DZ series
• glass industry	Quality control, before, during and after the production of glass and coatings	iScope® (materials), Oxion (materials), Oxion Inverso (materials), bScope® (materials), StereoBlue, NexiusZoom, DZ series
• hematology	Study and diagnosis, treatment and prevention of diseases of the blood	iScope®, bScope® (darkfield), iScope® (darkfield), Oxion, Oxion (darkfield)
• histopathology	Microscopic examination of tissue, diagnosis of diseases	iScope®, Oxion, Delphi-X Observer
• horticulture	Selective breeding of plants and fruit for production of food	BioBlue.Lab, bScope®, iScope®, Oxion, StereoBlue, NexiusZoom, DZ series, MacroZoom
• in vitro fertilization	In vitro fertilization IFV. Quality control of collected egg and sperm	StereoBlue, NexiusZoom, DZ series, Z series
• marine Biology	Study of organisms living in the ocean or seas as branch of biology	bScope®, BioBlue.Lab, iScope®, Oxion
• mechanics	Manufacturing and quality inspection of mechanical parts	Delphi-X Observer (materials), iScope® (materials), Oxion (materials), Oxion Inverso (materials), bScope® (materials), StereoBlue, NexiusZoom, DZ series, MacroZoom
• metallurgy	Manufacturing and quality inspection of metallic elements, intermetallic compounds and alloys	Delphi-X Observer (materials), iScope® (materials), Oxion (materials), bScope® (materials), StereoBlue, NexiusZoom, DZ series, MacroZoom
• microbiology	Study of microscopic uni-, multi- or acellular small organisms such as protozoa, algae, bacteria and more	iScope®, Oxion, StereoBlue, NexiusZoom, DZ series
• mycology	Study of fungi as branch of biology	BioBlue.Lab, bScope®, iScope®, Oxion, StereoBlue, NexiusZoom, DZ series

UNIVERSITY LABS	FIELD OF APPLICATION	RECOMMENDED MODELS
• mining	Extraction of minerals for identification, quantitative and qualitative evaluation of minerals	iScope® (materials and polarization), Oxion (materials and polarization), Oxion Inverso (materials), bScope® (materials), StereoBLue, NexiusZoom, DZ series, MacroZoom
• neuropathology	Study and diagnosis of diseases in nervous system tissue	Delphi-X Observer, iScope®, Oxion, StereoBlue, NexiusZoom, DZ series
• oncology	Study and diagnosis, treatment and prevention of cancers	Delphi-X Observer, iScope®, Oxion
• ornithology	Study of birds as branch of zoology. Diagnosis of diseases in birds such as competition pigeons	BioBlue.Lab, bScope®, iScope®, Oxion, StereoBlue, NexiusZoom, DZ series
• paleontology	Study of fossils in order to determinate organisms evolution	iScope® (materials), Oxion (materials), bScope® (materials), StereoBlue, NexiusZoom, DZ series, MacroZoom
• paper industry	Production of paper related products. Quality inspection	iScope® (materials), Oxion (materials), bScope® (materials), StereoBlue, NexiusZoom, DZ series, MacroZoom
• parasitology	Study of parasites, medical and veterinary	BioBlue.Lab, bScope®, iScope®, Oxion, StereoBlue, NexiusZoom, DZ series, MacroZoom
• pathology	Study and diagnosis of diseases	Delphi-X Observer, iScope®, Oxion
• petrochemical	Research and transformation of crude oil and natural gas	iScope® (materials), Oxion (materials), bScope® (materials), StereoBlue, NexiusZoom, DZ series
• petrology	Study of the composition and structure of rocks as branch of geology. Identification by means of polarization	iScope® (polarization), StereoBlue, NexiusZoom, DZ series
• pharmaceutics	Development and production of drugs for medication. Quality assurance and inspection of produced products	Delphi-X Observer, iScope® (polarization), StereoBlue, NexiusZoom, DZ series
• phytopathology	Study and diagnosis of plant diseases	BioBlue.Lab, bScope®, iScope®, Oxion, StereoBlue, NexiusZoom, DZ series
• plastics	Development and production of plastics and plastic based compounds. Quality assurance and inspection	iScope® (materials), Oxion (materials), Oxion Inverso (materials), bScope® (materials), StereoBlue, NexiusZoom, DZ series
• textile	Development and production of all kinds of textile based products. Quality assurance and inspection	iScope® (materials), Oxion (materials), bScope® (materials), AP series, StereoBlue, NexiusZoom, DZ series, MacroZoom
• veterinary medicine	Prevention, diagnosis and treatment of diseases, injuries in animals	BioBlue.Lab, bScope®, iScope®, Oxion, Oxion Inverso, StereoBlue, NexiusZoom, DZ series
• virology	Study and diagnosis of viruses and virus-like agents	Delphi-X Observer, iScope®, Oxion, BioBlue.Lab, bScope®
• water treatment	Production of drinking water and wastewater treatment. Quality control and disease prevention	BioBlue.Lab, bScope®, iScope®, Oxion
• wood production	Wood production for construction material, fuel. Quality control	iScope® (materials), Oxion (materials), Oxion Inverso (materials), bScope® (materials), AP series, StereoBlue, NexiusZoom, DZ series, MacroZoom
• zoology	Animal biology. Study of invertebrates and vertebrates and related branches	BioBlue.Lab, bScope®, iScope®, Oxion, StereoBlue, NexiusZoom, DZ series

LIFE SCIENCE LABORATORIES	FIELD OF APPLICATION	RECOMMENDED MODELS
• **agronomy & forestry**	Selective breeding of plants, fruit and production of food from plants, wood from trees, fuel. Plant physiology and genetics research	BioBlue.Lab, bScope®, iScope®, Oxion, StereoBlue, NexiusZoom, DZ series, MacroZoom
• **anatomopathology**	Diagnosis of diseases of organs or tissues. Cytopathology and forensic pathology	Delphi-X Observer, iScope®, bScope®, BioBlue.Lab, Oxion, StereoBlue, NexiusZoom, DZ series
• **bacteriology**	Study of bacteria as subdivision of microbiology. Identification, classification	BioBlue.Lab, bScope®, iScope®, Oxion, Oxion Inverso, Delphi-X Observer
• **biochemistry**	Study of chemical processes within living organism. Identification and classification of enzymes and structure of biomolecules	BioBlue.Lab, bScope®, iScope®, Oxion
• **biomedical**	Study of medical microbiology, virology, epidemiology, biomedical engineering	Delphi-X Observer, iScope®, bScope®, BioBlue.Lab, Oxion
• **biotechnology**	Study of living organism in order to make food products, for plant protection (genetically modified organism) and other bioprocess engineering. Development of pharmaceutical drugs, genetic testing, enzymes production, biofuels, textile	Delphi-X Observer, iScope®, bScope®, BioBlue.Lab, Oxion, NexiusZoom, DZ series, MacroZoom
• **botany**	Study of plants as branch of biology. Plant anatomy and morphology. Plant genetics and ecology. Plant biochemistry	BioBlue.Lab, iScope®, Oxion, StereoBlue, NexiusZoom, DZ series
• **cell culture**	Controlled growth of cells and tissues, fungal culture and microbiological culture	Delphi-X Inverso, Oxion Inverso, NexiusZoom, DZ series
• **chemistry**	Study of the composition and properties of chemicals	iScope® (materials and polarization), Oxion (materials), bScope® (materials), NexiusZoom, DZ series
• **cosmetics**	Research, development and testing (safety) of substances for make-up or perfume	bScope® (materials), iScope® (materials), NexiusZoom, Oxion (materials), DZ series
• **cytology**	Study of cell structure, function an chemistry. Detection of cellular diseases	Delphi-X Observer, iScope®, bScope®, BioBlue.Lab, Oxion
• **dermatology**	Study and diagnosis, treatment of skin, nails and hair diseases	iScope®, Oxion, NexiusZoom, StereoBlue, DZ series, MacroZoom
• **digital imaging**	Observation and analysis of microscope images, save and captured the images and videos	CMEX cameras, CCD cameras, HD cameras, Cooled cameras, ProPad, MacroZoom
• **embryo collection**	Embryo collection and transfer in mares, pigs, cows. Quality control	NexiusZoom, DZ series, Z series
• **embryology**	Study of gametes, embryos and fetuses	BioBlue.Lab, bScope®, iScope®, Oxion, NexiusZoom, DZ series, Z series
• **entomology**	Study of insects as branch of zoology. Identification and classification of beetles, flies, termites, moths and butterflies, bees, ants, wasps	BioBlue.Lab, bScope®, iScope®, Oxion, StereoBlue, NexiusZoom, DZ series, MacroZoom
• **environmental**	Monitoring of environmental conditions such as water, atmosphere, ecosystems, soil and pollution	BioBlue.Lab, bScope®, iScope®, Oxion, StereoBlue, NexiusZoom, DZ series
• **fluorescence**	Study of living and non living material with the help of fluorescence markers (fluorochromes)	Delphi-X Observer (fluorescence), iScope® (fluorescence), Oxion (fluorescence), Oxion Inverso (fluorescence), bScope® (fluorescence), DZ series
• **forensics**	Analysis of scientific evidence. Toxicology, fingerprints, Forensic anthropology and archeology, forensic botany and entomology	BioBlue.Lab, bScope®, iScope®, Delphi-X Observer, Oxion, Oxion Inverted, NexiusZoom, DZ series, Z series
• **food and beverages**	Quality and safety controls, before, during and after the production of food and beverages	BioBlue.Lab, bScope®, iScope®, Oxion

LIFE SCIENCE LABORATORIES	FIELD OF APPLICATION	RECOMMENDED MODELS
• **genetics**	Study of genes, heredity in living organism including bacteria, plants, animals and humans	Delphi-X Observer, iScope®, Oxion, DZ series
• **hematology**	Study and diagnosis, treatment and prevention of diseases of the blood	Delphi-X Observer, iScope®, bScope® (dark filed), iScope® (darkfield), Oxion, Oxion (darkfield), iScope®, Oxion
• **histopathology**	Microscopic examination of tissue, diagnosis of diseases	Delphi-X Observer, iScope®, Oxion
• **horticulture**	Selective breeding of plants and fruit for production of food	BioBlue.Lab, bScope®, iScope®, Oxion, StereoBlue, NexiusZoom, DZ series, MacroZoom
• **histopathology**	Microscopic examination of tissue, diagnosis of diseases	iScope®, Oxion
• **in vitro fertilization**	In vitro fertilization IVF. Quality control of collected egg and sperm	StereoBlue, NexiusZoom, DZ series, Z series
• **marine miology**	Study of organisms living in the ocean or seas as branch of biology	iScope®, Oxion, NexiusZoom, DZ series
• **microbiology**	Study of microscopic uni-, multi- or acellular small organisms such as protozoa, algae, bacteria and more. Identification and classification	Delphi-X Observer, iScope®, Oxion, NexiusZoom, DZ series
• **mycology**	Study of fungi as branch of biology. Identification and classification	BioBlue.Lab, bScope®, iScope®, Oxion, StereoBlue, NexiusZoom, DZ series
• **neuropathology**	Study and diagnosis of diseases in nervous system tissue	Delphi-X Observer, iScope®, Oxion, NexiusZoom, DZ series
• **oncology**	Study and diagnosis, treatment and prevention of cancers	Delphi-X Observer, iScope®, Oxion
• **parasitology**	Study of parasites, medical and veterinary	BioBlue.Lab, bScope®, iScope®, Oxion, StereoBlue, NexiusZoom, DZ series
• **pathology**	Study and diagnosis of diseases	Delphi-X Observer, iScope®, Oxion
• **pharmaceutics**	Development and production of drugs for medication. Quality assurance and inspection of produced products	iScope® (polarization), StereoBlue, NexiusZoom, DZ series
• **phytopathology**	Study and diagnosis of plant diseases	BioBlue.Lab, bScope®, iScope®, Oxion, StereoBlue, NexiusZoom, DZ series, MacroZoom
• **veterinary medicine**	Prevention, diagnosis and treatment of diseases, injuries on animals	BioBlue.Lab, bScope®, iScope®, Oxion, Oxion Inverso, StereoBlue, NexiusZoom, DZ series
• **virology**	Study and diagnosis of viruses and virus-such as agents	Delphi-X Observer, BioBlue.Lab, bScope®, iScope®, Oxion
• **water treatment**	Production of drinking water and wastewater treatment. Quality control and disease prevention	BioBlue.Lab, bScope®, iScope®, Oxion
• **zoology**	Animal biology. Study of invertebrates and vertebrates and related branches	BioBlue.Lab, bScope®, iScope®, Oxion, StereoBlue, NexiusZoom, DZ series

INDUSTRY	FIELD OF APPLICATION	RECOMMENDED MODELS
• aerospace	Manufacturing and quality inspection of rockets and space vehicles related parts	iScope® (materials), Oxion (materials), NexiusZoom, DZ series, Z series
• agronomy & forestry	Selective breeding of plants, fruit and production of food from plants, wood from trees, fuel. Plant physiology and genetics research	BioBlue.Lab, bScope®, iScope®, Oxion, StereoBlue, NexiusZoom, DZ series, MacroZoom
• asbestos control	Research of asbestos fibers, environmental protection during restoration of older buildings	iScope® (asbestos and polarization), NexiusZoom, DZ series, Z series
• automotive	Manufacturing and quality inspection of automotive related parts	iScope® (materials), Oxion Inverso (materials), NexiusZoom, DZ series, Z series
• avionics	Manufacturing and quality inspection of aircraft related parts	iScope® (materials), NexiusZoom, DZ series
• biochemistry	Study of chemical processes within living organism. Identification and classification of enzymes and structure of biomolecules	BioBlue.Lab, iScope®, Oxion, NexiusZoom, DZ series
• chemistry	Study of the composition and properties of chemicals	iScope® (materials), Oxion (materials)
• cosmetics	Research, development and testing (safety) of substances for make-up or perfume	bScope® (materials), iScope® (materials), Oxion (materials), NexiusZoom, DZ series
• digital imaging	Observation and analysis of microscope images, save and captured the images and videos	CMEX cameras, CCD cameras, HD cameras, ProPad, MacroZoom
• electronics	Development, production, assembling and inspection of electronic components or circuitry	iScope® (materials), Oxion (materials), NexiusZoom, DZ series, Z series, BE-50 LED, MacroZoom
• environmental	Monitoring of environmental conditions such as water, atmosphere, ecosystems, soil and pollution	BioBlue.Lab, bScope®, iScope®, Oxion, StereoBlue, NexiusZoom, DZ series
• food and beverages	Quality and safety controls, before, during and after the production of food and beverages	BioBlue.Lab, bScope®, iScope®, Oxion
• forensics	Analysis of scientific evidence. Toxicology, fingerprints, Forensic anthropology and archeology, forensic botany and entomology	BioBlue.Lab, bScope®, bScope® (materials), iScope®, iScope® (materials and polarization), Oxion, Oxion (materials), Oxion Inverted, Oxion Inverted (materials), NexiusZoom, DZ series, Z series
• geology, mineralogy	Earth science that study the solid, rocks and processes. Identification and classification of rocks and minerals	iScope® (materials), Oxion (materials), Oxion Inverso (materials), B+ (materials), StereoBlue, NexiusZoom, DZ series, MacroZoom
• geology, petrology	Identification by means of an petrographic microscope	iScope® (polarization)
• glass industry	Quality control, before, during and after the production of glass and coatings	iScope® (materials), Oxion (materials), Oxion Inverso (materials), bScope® (materials), StereoBlue, NexiusZoom, DZ series
• horticulture	Selective breeding of plants and fruit for production of food	BioBlue.Lab, bScope®, iScope®, Oxion, StereoBlue, NexiusZoom, DZ series, MacroZoom
• jewelry	Precise manufacturing of very small decorative items such as brooches, rings, bracelets and more	BE-50 LED series, StereoBlue, NexiusZoom, DZ series, Z series

INDUSTRY	FIELD OF APPLICATION	RECOMMENDED MODELS
• mechanics	Manufacturing and quality inspection of mechanical parts	iScope® (materials), Oxion (materials), Oxion Inverso (materials), bScope® (materials), StereoBlue, NexiusZoom, DZ series, MacroZoom
• metallurgy	Manufacturing and quality inspection of metallic elements, intermetallic compounds and alloys	iScope® (materials), Oxion (materials), Oxion Inverso (materials), bScope® (materials), StereoBlue, NexiusZoom, DZ series, MacroZoom
• mining	Extraction of minerals Identification, quantitative and qualitative evaluation of minerals	iScope® (materials and polarization), Oxion (materials and polarization), Oxion Inverso (materials), bScope® (materials), StereoBlue, NexiusZoom, DZ series
• paper industry	Production of paper related products. Quality inspection	iScope® (materials), Oxion (materials), bScope® (materials), StereoBlue, NexiusZoom, DZ series, MacroZoom
• petrochemical	Research and transformation of crude oil and natural gas	iScope® (materials), Oxion (materials), bScope® (materials), StereoBlue, NexiusZoom, DZ series
• petrology	Study of the composition and structure of rocks as branch of geology. Identification by means of polarization microscopy	iScope® (polarization), StereoBlue, NexiusZoom, DZ series
• pharmaceutics	Development and production of drugs for medication. Quality assurance and inspection of produced products	iScope® (polarization), StereoBlue, NexiusZoom, DZ series
• plastics	Development and production of plastics and plastic based compounds. Quality assurance and inspection	iScope® (materials), Oxion (materials), Oxion Inverso (materials), bScope® (materials), StereoBlue, NexiusZoom, DZ series
• printing industry	Production of relief printing, lithography	iScope® (materials), Oxion (materials), bScope® (materials), AP series, StereoBlue, NexiusZoom, DZ series, MacroZoom
• textile	Development and production of all kinds of textile based products. Quality assurance and inspection	iScope® (materials), Oxion (materials), Oxion Inverso (materials), B+ (materials), AP series, StereoBlue, NexiusZoom, DZ series, MacroZoom
• water treatment	Production of drinking water and wastewater treatment. Quality control and disease prevention	BioBlue.Lab, bScope®, iScope®, Oxion
• wood production	Wood production for construction material, fuel. Quality control	iScope® (materials), Oxion (materials), Oxion Inverso (materials), B+ (materials), AP series, StereoBlue, NexiusZoom, DZ series, MacroZoom

index

PRODUCT	OTHER P	EDUCATION A	LIFE SCIENCE G	MATERIALS SCIENCE E
Abbe refractometer	407			
About -				
- Antoni van Leeuwenhoek			205	
- APL		53		
- camera resolutions and limits			261	
- differential interference contrast				331
- field of view			143	361
- fluorescence			185	
- magnifiers				309
- microscope basics		21		
- microscope optics			237	
- objectives		15		
- petrological microscopy				343
- stereo microscopes				297
Accessories for microscopy	368			
Adapter guide		102	268	366
AP series		68		
Autofocus cameras		92	256	358
BE-50 Series				304
BioBlue		22		
BioBlue digital		78	240	
BioBlue.Lab		28	144	
Biological microscopes		8	104	
bScope biological		32	118	
bScope digital		80	242	
bScope fluorescence			168	
bScope materials				320
CMEX Pro USB-3.0 cameras		90	254	356
CMEX USB-2.0 cameras		88	253	355
CMEX-WIFI camera		94	252	354

PRODUCT	OTHER P	EDUCATION A	LIFE SCIENCE G	MATERIALS SCIENCE E
Cold light sources	372			
Cooled camera		95	260	360
Delphi-X Inverso biological			148	
Delphi-X Inverso fluorescence			186	
Delphi-X Inverso materials				336
Delphi-X Observer biological			126	
Delphi-X Observer fluorescense			174	
Delphi-X Observer materials				324
Differential interference contrast				331
Digital MacroZoom		86	244	346
Digital microscopes		74	240	
Digital solutions		72	238	344
Disposables	394			
Dissection instruments	378			
Dissection kits	380			
DZ series			222	292
EcoBlue		16		
Ecoblue digital		76		
EduBlue		48		
EduBlue digital		82		
EduBlue LCD		84		
EduPad		96		
Field of view			143	361
Fluorescense filter sets			200	
Fluorescense LED light sources			198	
Fluorescense microscopes			160	
Handheld magnifiers	398			
Handheld refractometers	404			
Handheld spectroscopes	410			
High definition cameras		92	256	358

PRODUCT	OTHER P	EDUCATION A	LIFE SCIENCE G	MATERIALS SCIENCE E
How to keep the optics clean			117	
How to match camera resolution			251	
How to set up a stereo microscope		59	217	283
Illumination solutions	370			
ImageFocus software		100	264	364
Inverted biological			148	
Inverted fluorescence			186	
Inverted materials				336
iScope biological		38	106	
iScope fluorescence			162	
iScope materials				312
LED cold light sources	372			
LED ring light sources	372			
LED light sources fluorescence			198	
Light sources	370			
MacroZoom		86	244	346
Magnifiers	398			
Measuring microscopes	400			
MicroBlue		10		
MicroBlue digital		74		
Microscope basics		21		
Microscope optics			237	
NexiusZoom ESD				272
NexiusZoom and -EVO		60	208	272
NexiusZoom for gemology				284
Objectives		15		
Other products	396			
Optical instruments	396			
Oxion biological			138	
Oxion fluorescence			180	

PRODUCT	OTHER P	EDUCATION A	LIFE SCIENCE G	MATERIALS SCIENCE E
Oxion Inverso biological			154	
Oxion Inverso materials				340
Oxion Inverso fluorescence			192	
Oxion materials				332
P series			234	306
Petrological microscopy				343
Polarimeters	408			
Polarization microscopes				314
Polarization microscopes advanced				328
Preparation accessories	378			
Prepared slides	382			
Prepared slides Individual	390			
ProPad		98	262	362
Refractometers	402			
Ring lights	374			
sCMEX USB-3.0 camera		91	255	357
Software		100	264	364
Spectroscopes	410			
Stains	395			
StereoBlue		54	218	288
Stereo microscopes		46	206	270
Stereo microscopes (about)				297
Tablet camera		96	262	362
USB 2 cameras		88	253	355
USB 3 cameras		90	254	356
WiFi camera		94	252	354
Z series			228	300

Since 1966

euromex
MICROSCOPE COLLECTION
2023 • 2024

CERTIFIED ISO 13485 CERTIFIED ISO 9001

The Euromex Quality System is certified according to ISO 9001:2015, and ISO 13485:2016 for medical supplies. This supports our pursuit of continuous improvement and our on-going commitment to provide our world-wide customers assurance of product quality

DISCLAIMER

All information and materials contained in this catalog have been prepared solely for the purpose of providing general information about the products offered by Euromex Microscopen bv. The content of and all information published in this catalog are provided in good faith as a convenience to you and may be used for information purposes only and at all times in accordance with these terms of access

Euromex Microscopen bv does not warrant the completeness or accuracy of information obtained from its catalog and does not undertake to update or correct its content or the information and/or materials contained on it on a regular basis

Euromex Microscopen bv reserves the right to make improvements and/or changes to (including the removal of) the products described or referred to in the catalog and to delete and/or move any such information at any time and without notice

---

Euromex is a registered trademark of Euromex Microscopen bv

© 2023 Copyright Euromex Microscopen bv

HEADQUARTERS

Euromex Microscopen bv
Papenkamp 20
6836 BD Arnhem
The Netherlands
Tel: +31 (0) 26 323 22 11
info@euromex.com

EUROPEAN SALES OFFICE

Euromex Microscopen Spain, S.L
Carretera de Barcelona 88, Entresuelo
Esc. B - Local 9
08302 Mataró, Spain
Tel: +34 (0) 937 415 609
info@euromex.com

www.euromex.com

V.423261